Haier

Commercial Air Conditioning

SERVICE MANUAL

Model

HPU-42CV03
HPU-42HV03

- **Features**

- Long distribution pipe and high drop
- The outdoor can match with multiple types indoor unit of the same capacity
- The indoor unit is identical for heat pump and cooling only unit
- Infra red remote controller
- Central control and full automation, if connected with a central controller
- Optional safety devices and much more precision control device
- Auto-restart function

Manual code: SYJS-016-06REV.0 Edition: 2006-06-12

splitoff.ru

Большая библиотека технической документации
http://splitoff.ru/tehn-doc.html
каталоги, инструкции, сервисные мануалы, схемы.

CONTENTS

Contents……...1
1. Description of products & features……..2
2. Specification……4
3. Safety precaution……7
4. Net dimension of indoor and outdoor……..9
5. Installation instructions……..……10
6. Parts and functions……21
7. Infrared controller functions……..22
8. Refrigerant diagram.....……39
9. Electrical control functions……41
10. Diagnostic information (trouble shooting)……..47
11. Electrical data.....……53

Все каталоги и инструкции здесь: http://splitoff.ru/tehn-doc.html

1.DESCRIPTION OF PRODUCTS & FEATURES

1.1. Products code explanation

H P U - 42 C V 03

- 03 — Power supply type: 03 stands for 200-220V, 50Hz
- V — Design sequence
- C — C: cooling; H: heating
- 42 — Cooling capacity: 42=42000BTU/h
- U — U: single split unit
- P — Product type : “B” stands for cassette type, “C” stands for convertible type, ”D” stands for duct, “S” stands for split type, ”P” stands for cabinet system, "E" stands for ceiling concealed type.
- H — Haier Brand Air Conditioner

1.2 Brief Introduction for T1、T2、T3 working condition

Type of Air Conditioner	Climate type		
	T1	T2	T3
Cooling Only	18 ℃~43℃	10℃~35℃	21℃~52℃
Heat pump	-7℃~43℃	-7℃~35℃	-7℃~52℃
Electricity Heating	~43℃	~35℃	~52℃

1.3 Operating Range of Air Conditioners

Temp. \ Mode			Rated	Maximum	Minimum
Cooling	Indoor	DB ℃	27	32	15
		WB ℃	19	23	14
	Outdoor	DB ℃	35	43	-5
		WB ℃	24	26	6
Heating	Indoor	DB ℃	20	27	10
		WB ℃	14.5	---	--
	Outdoor	DB ℃	7	23	-10
		WB ℃	6	18	---

Все каталоги и инструкции здесь: http://splitoff.ru/tehn-doc.html

1.5 Product features

1.5.1 Outdoor unit .

Flexible and easy installation

The outdoor can meet the higher request of installation. From the specifications, you will find for each unit, how long and how high the piping will be, which will be convenient for design and installation.

Optional safety devices and much more precision control device

a. Ambient **temperature sensor**, coil temperature sensor and compressor temperature sensor make the temperature control and defrosting control more precise.
b. **High/low pressure switch** can feel the discharging pipe pressure and suction pipe pressure on time and precisely. If the pressure is too low or too high, it will stop the compressor to prevent it being damaged for the sake of pressure.
c. **3 minutes delay protection** for the compressor, the device can protect the compressor from some damages and make the compressor have a long life.

Silent operation

1.5.2 Steady cabinet indoor unit

Powerfull running & long distance air sending

The unit can run powerfully and supply large volume of cooled air to the room. Long distance and large angle air sending ensures average temperature distribution, bring you much more comfortable indoor environment in the shortest time.

Newly designed display panel, more simple

On the display panel there are power, operation, timer, and electric heating indicator, from which you can find the operation state directly, and the indicator flash times can show the failure.

Malfunction Auto-checking

Failure codes displayed by LED or controllers are so detailed for us to find the fail place more quickly, and can judge the failure content easily.

Powerfull/Soft function

Special button on remoto controller is used to set powerful working or soft working.

Single fan outdoor, more compact

Central control function, if connected with a detector and a central controller

Все каталоги и инструкции здесь: http://splitoff.ru/tehn-doc.html

2. SPECIFICATION

item					Model	HPU-42CV03	
Function						cooling	heating
Capacity					BTU/h	41000	----
Capacity					kW	12.0	
Sensible heat ratio						70%	----
Total power input					W	3700	----
Max. power input					W	4400	----
EER or COP					W/W	3.24	----
Dehumidifying capacity					10 - ³×m³/h	5.0	
Power cable					section	5G×2.5mm^2	
Signal cable					section	4G×0.75mm^2	
Connecting cable					section		
Wired control cable		for wired control unit			section	/	/
Power source					N, V, Hz	3N，380-400V，50HZ	
Running /Max.Running current					A / A	Cooling 6.9A/7.8A Heating 7.0/8.3	
Start Current					A	50	
Class of anti electric shock						CLASS I	----
Circuit breaker					A	20	
Max. operating pressure of heat side					Mpa	2.8	----
Max. operating pressure of cold side					Mpa	2.8	----
Indoor unit	Unit model (color)					HPU-42CV03(WHITE)	
	Fan	Type × Number				centrifugal	
		Speed(H-M-L)			r/min	430/405/370	
		Fan motor output power			kW	0.09	
		Air-flow(H-M-L)			m³/h	1750	
	Heat exchanger	Type / Diameter			mm	inner grooved/φ7	
		Total Area			m²	0.45	
		Temp. scope			℃		
	Dimension	External	（L×W×H）		mm×mm×mm	1850×600×350	
		Package	（L×W×H）		mm×mm×mm	1980×660×420	
	Air sending angle						
	Drainage pipe (material , I.D./O.D.)				mm		
	Control type (Remote /wired /model)					Remote	
	Fresh air hole dimension				mm	/	
	Outlet distribution hole dimension				mm		
	Electricity Heater				kW	/	
	Noise level (H-M-L)				dB(A)	51	
	Weight (Net / Shipping)				kg / kg	59/70	
Panel	Dimension	External	（L×W×H）		mm×mm×mm	/	
		Package	（L×W×H）		mm×mm×mm	/	
	Weight (Net / Shipping)				kg / kg	/	
Outdoor unit	Unit model (color)					HPU-42CV03(WHITE)	
	Compressor	Model / Manufacture				VR54KS-TFP-542/COPELAND	
		Oil model					
		Oil type				3GS	
		Oil charging				1360	
		Type				SCROLL	
		Protection type				Inner thermal protection	
		Starting method				hard startup	
	Fan	Type × Number				Axial*2	
		Speed			r/min	840	
		Fan motor output power			kW	0.06	
		Air-flow(H-M-L)			m³/h	6000	
	Heat exchanger	Type / Diameter			mm	inner grooved/φ9.52	
		Row / Fin pitch				2/1.6	
		Temp. scope			℃		
	Dimension	External	（L×W×H）		mm×mm×mm	948*340*1250	
		Package	（L×W×H）		mm×mm×mm	1090*410*1350	
	Drainage pipe (material , I.D./O.D.)				mm		
	Refrigerant control method				mm/mm	Capillary tube	
	Defrosting					Automatic	
	Volume of Accumulator				L	/	
	Noise level				dB(A)	59	
	Type of Four way valve					/	
	material of reduce noise					/	
	crankcase heater power				W	/	
	Weight (Net / Shipping)				kg / kg	106/111	
PIPING	Refrigerant	Type / Charge			g	R22/3400	
		Recharge quantity			g/m	65	
	Pipe	Liquid			mm	φ9.52	
		Gas			mm	φ19.05	
	Connecting Method					Flared	
	Between I.D &O.D	MAX.Drop			m	30	
		MAX.Piping length			m	50	

Norminal condition: indoor temperature (cooling): 27℃DB/19℃WB, indoor temperature (heating): 20℃DB
Outdoor temperature(cooling): 35℃DB/24℃WB, outdoor temperature(heating): 7℃DB/6℃WB
The noise level will be measured in the third octave band limited values, using a Real Time Analyser calibrated sound intensity meter. It is a sound pressure noise level.
The detailed method please refer to the following information:

Все каталоги и инструкции здесь: http://splitoff.ru/tehn-doc.html

Haier

Commercial Air Conditioner

Model: HPU-42CV03
HPU-42HV03

item					Model	HPU-42HV03	
Function						cooling	heating
Capacity					BTU/h	41000	44000
Capacity					kW	12.0	13.0
Sensible heat ratio						70%	
Total power input					W	3700	4000
Max. power input					W	4400	4900
EER or COP					W/W	3.24	3.25
Dehumidifying capacity					10 - ³×m³/h	5.0	
Power cable					section	5G×2.5mm^2	
Signal cable					section	4G×0.75mm^2	
Connecting cable					section		
Wired control cable		for wired control unit			section	/	/
Power source					N, V, Hz	3N，380-400V，50HZ	
Running /Max.Running current					A / A	Cooling 6.9A/7.8A Heating 7.0/8.3	
Start Current					A	50	
Class of anti electric shock						CLASS I	CLASS I
Circuit breaker					A	20	
Max. operating pressure of heat side					Mpa	2.8	2.8
Max. operating pressure of cold side					Mpa	2.8	2.8
Indoor unit	Unit model (color)					HPU-42HV03(WHITE)	
	Fan	Type × Number				centrifugal	
		Speed(H-M-L)			r/min	430/405/370	
		Fan motor output power			kW	0.09	
		Air-flow(H-M-L)			m³/h	1750	
	Heat exchanger	Type / Diameter			mm	inner grooved/φ7	
		Total Area			m²	0.45	
		Temp. scope			℃		
	Dimension	External	（L×W×H）		mm×mm×mm	1850×600×350	
		Package	（L×W×H）		mm×mm×mm	1980×660×420	
	Air sending angle						
	Drainage pipe (material , I.D./O.D.)				mm		
	Control type (Remote /wired /model)					Remote	
	Fresh air hole dimension				mm	/	
	Outlet distribution hole dimension				mm		
	Electricity Heater				kW	/	
	Noise level (H-M-L)				dB(A)	51	
	Weight (Net / Shipping)				kg / kg	59/70	
Panel	Dimension	External	（L×W×H）		mm×mm×mm	/	
		Package	（L×W×H）		mm×mm×mm	/	
	Weight (Net / Shipping)				kg / kg	/	
Outdoor unit	Unit model (color)					HPU-42HV03(WHITE)	
	Compressor	Model / Manufacture				VR54KS-TFP-542/COPELAND	
		Oil model					
		Oil type				3GS	
		Oil charging				1360	
		Type				SCROLL	
		Protection type				Inner thermal protection	
		Starting method				hard startup	
	Fan	Type × Number				Axial*2	
		Speed			r/min	840	
		Fan motor output power			kW	0.06	
		Air-flow(H-M-L)			m³/h	6000	
	Heat exchanger	Type / Diameter			mm	inner grooved/φ9.52	
		Row / Fin pitch				2/1.6	
		Temp. scope			℃		
	Dimension	External	（L×W×H）		mm×mm×mm	948*340*1250	
		Package	（L×W×H）		mm×mm×mm	1090*410*1350	
	Drainage pipe (material , I.D./O.D.)				mm		
	Refrigerant control method				mm/mm	Capillary tube	
	Defrosting					Automatic	
	Volume of Accumulator				L	/	
	Noise level				dB(A)	59	
	Type of Four way valve					/	
	material of reduce noise					/	
	crankcase heater power				W	40	
	Weight (Net / Shipping)				kg / kg	106/111	
PIPING	Refrigerant	Type / Charge			g	R22/3400	
		Recharge quantity			g/m	65	
	Pipe	Liquid			mm	φ9.52	
		Gas			mm	φ19.05	
	Connecting Method					Flared	
	Between I.D &O.D	MAX.Drop			m	30	
		MAX.Piping length			m	50	

Norminal condition: indoor temperature (cooling): 27℃DB/19℃WB, indoor temperature (heating): 20℃DB
Outdoor temperature(cooling): 35℃DB/24℃WB, outdoor temperature(heating): 7℃DB/6℃WB
The noise level will be measured in the third octave band limited values, using a Real Time Analyser calibrated sound intensity meter. It is a sound pressure noise level.
The detailed method please refer to the following information:

Все каталоги и инструкции здесь: http://splitoff.ru/tehn-doc.html

Installation state: the unit should be placed on the flat floor or be mounted in horizontal direction.

Testing method:

standing-on-floor unit: If the unit cooling capacity is over 28000W, the noise level should be measured at the front, left, right directions respectively.

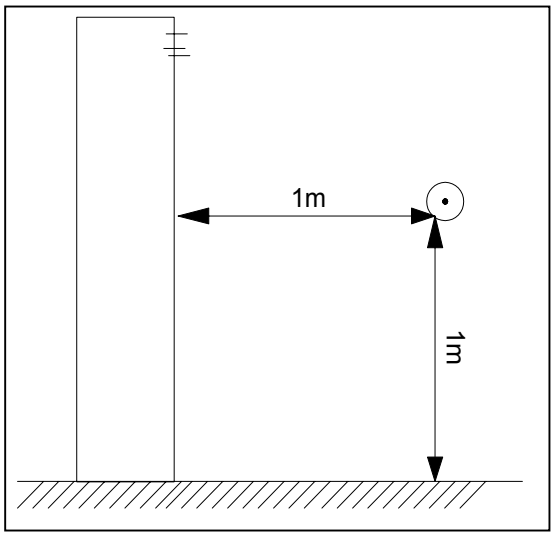

outdoor unit:
1.air outlet from side: the noise level is the average sound pressure level measured from front, left, right directions.
2.air outlet from top: the noise level is the average sound pressure level measured from front, back, left, right directions.
measured point:
H (height to the ground) = (h (unit height) + 1m) /2
and, it is 1m to each side.

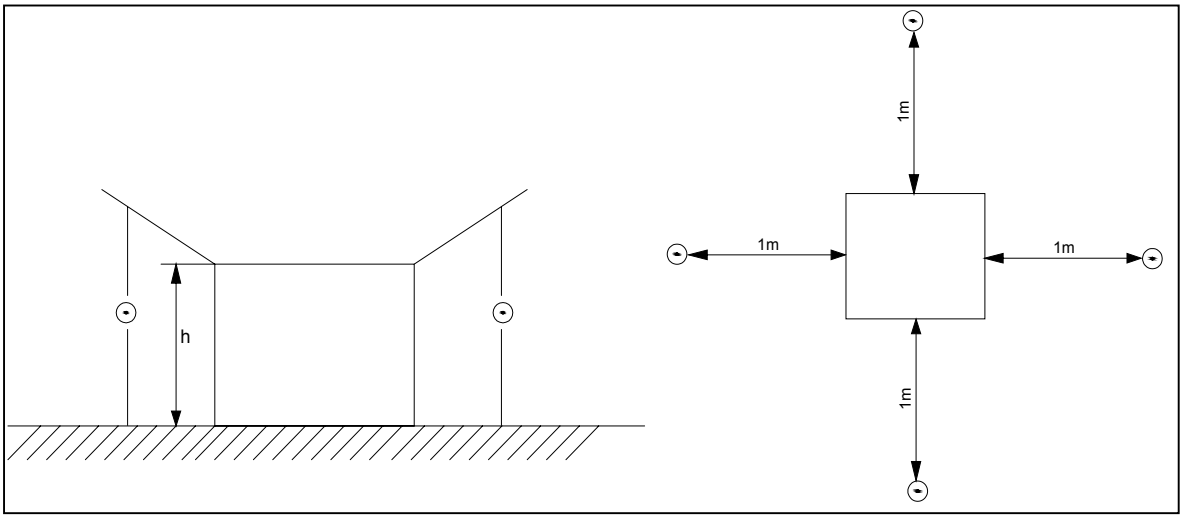

Note: ⊙ is the real time

Все каталоги и инструкции здесь: http://splitoff.ru/tehn-doc.html

3. Safety precaution of indoor and outdoor

Carefully read the following information in order to operate the airconditioner correctly.

Below are listed three kinds of Safety Cautions and Suggestions.

WARNING! Incorrect operations may result in severe consequences of death or serious injuries.

CAUTION! Incorrect operations may result in injuries or machine damages; in some cases may cause serious consequences.

INSTRUCTIONS: These information can ensure the correct operation of the machine.

Be sure to conform with the following important Safety Cautions.
The Safety Cautions should be at hand so that they can be checked at any time when needed.
If the conditioner is transferred to the new user, this manual should be as well transferred to the new user.

WARNING!

- **If any abnormal phenomena is found (e. g.smell of firing), please cut off the power supply immediately, and contact the dealer to find out the handling method.**

  In such case, to continue using the conditioner will damage the conditioner, and may cause electrical shock or fire hazard.

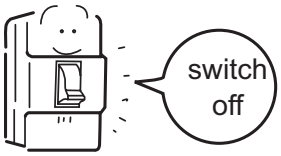

- **After a long time use of air-conditioner the base should be checked for any damages.**

  If the damaged base is not repaired, the unit may fall down and cause accidents.

- **Don't dismantle the outlet of the outdoor unit.**

  The exposure of fan is very dangerous whichmay harm human beings.

- **When need maintenance and repairment, call dealer to handle it.**

  Incorrect maintenance and repairment may cause water leak, electrical shock and fire hazard.

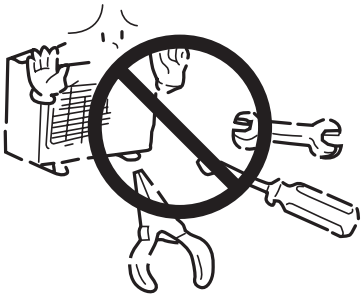

Все каталоги и инструкции здесь: http://splitoff.ru/tehn-doc.html

WARNING!

- **Installed electrical-leaking circuit breaker.**

  It easily cause electrical shock without circuit breaker.

- **Air-conditioner can't be installed in the environment with inflammable gases because the inflammable gases near to air-conditioner may cause fire hazard.**

- **Please let the dealer be responsible for installing the conditioner.**

  Incorrect installation may cause water leak, electrical shock and fire hazard.

- **Call the dealer to take measures to prevent the refrigerant from leaking.**

  If conditioner is installed in a small room be sure to take every measure in order to prevent suffocation accident even in case of refrigerant leakage.

- **When conditioner is deinstalled or reinstalleddealer should be responsible for them.**

  Incorrect installation may cause water leaking, electrical shock and fire hazard.

- **Connect earthing wire.**

  Earthing wire should not be connected to the gas pipe, water pipe, lightning rod or phone line, in-correct earthing may cause shock.

Earthing

- **No goods or nobody is permitted to placed on or stand on outdoor unit.**

  The falling of goods and people may cause accidents.

- **Don't operate the air-conditioner with damp hands.**

  Otherwise will be shocked.

- **Only use correctly-typed fuse.**

  May not use wire or any other materials replacing fuse, other-wise may cause faults or fire accidents.

- **Use discharge pipe correctly to ensure efficient discharge.**

  Incorrect pipe use may cause water leaking.

Все каталоги и инструкции здесь: http://splitoff.ru/tehn-doc.html

4. Net dimension of indoor and outdoor

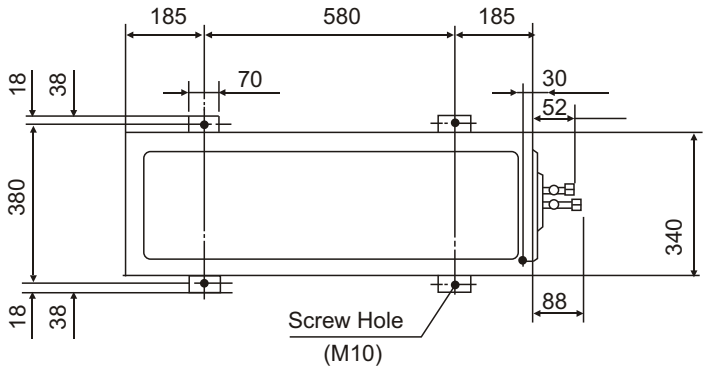

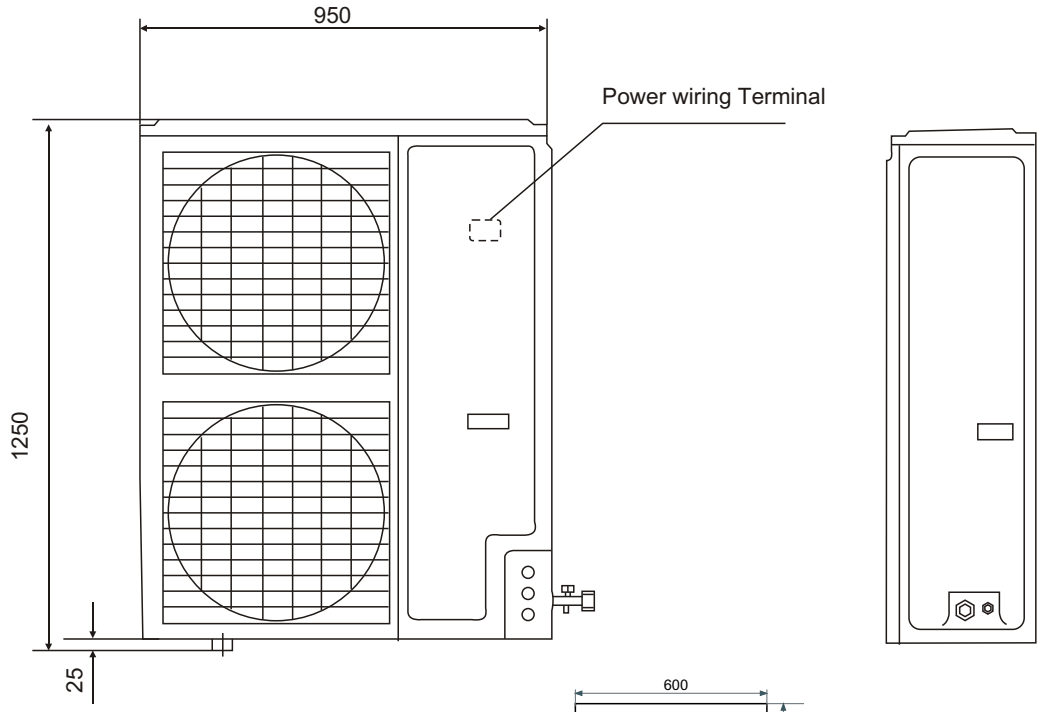

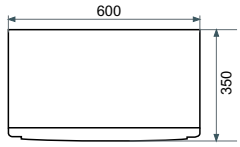

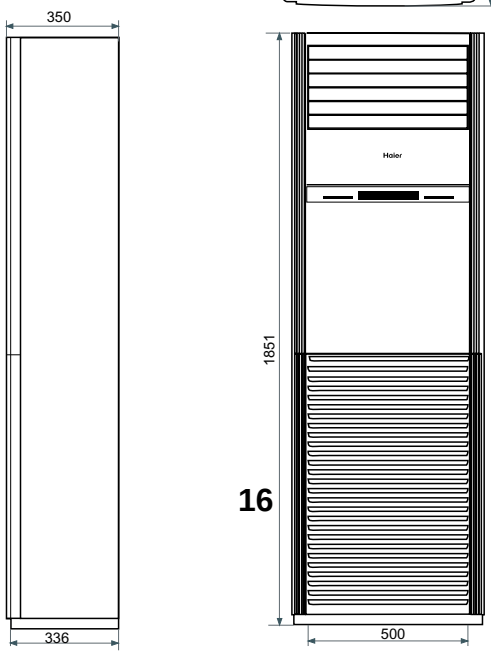

Все каталоги и инструкции здесь: http://splitoff.ru/tehn-doc.html

5. Installation Instructions

5.1 Outdoor unit installation

Necessary Tools:

1.Screwdriver

2.Hacksaw

3.70mm diameter hole drill

4.Spanner(dia.17,27mm)

5.Spanner(dia.14,17,27mm)

6.Pipe cutter

7.Flaring tool

8.Knife

9.Nipper

10.Gas leakage detector
or soap water

11.Tape measure

12.Reamer

13.Refrigerant oil

Installation Position

●Place strong enough to support the unit weight, and will not cause vibration and noise.

●Place where discharged air and noise do not cause interference to the neighbors, and is sufficiently ventilated.

●Place where is less affected by rain or direct sunlight and sea breeze.

●Place with enough space to ventilation

●The unit cannot be installed on an unspecified metal frame

●It shall not be less than 2.5m high from the ground to the unit if installed close to the street

●Easy for maintenance

Fixing of the unit

1.Position of the wall hole

The hole through the wall must be decided as per installation place and pipe direction. Please refer to the installation drawings.

2. Making the wall hole

Drill a hole of 120*70mm with a little slope to the exterior through the wall as follows:

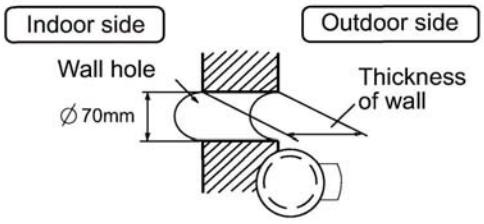

(Cross section of wall hole)

Все каталоги и инструкции здесь: http://splitoff.ru/tehn-doc.html

Installation Space

Installation where the area with strong winds.

Install the unit so that the air outlet section of the unit must NOT be faced toward wind direction.

Fixing of the unit

Fix outdoor unit using M10 bolt to concrete floor horizontally.
If installed on the wall or on top of a roof, bracket should be fixed securely to resist earthquake or storms.
Use rubber pad during installation against unit vibration.

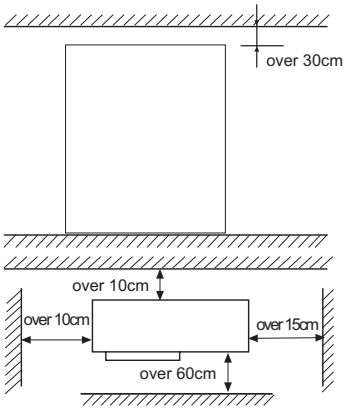

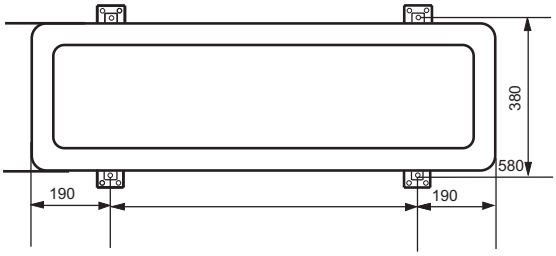

Installation dimension of outdoor unit(mm)

Refrigerant piping

Outline piping

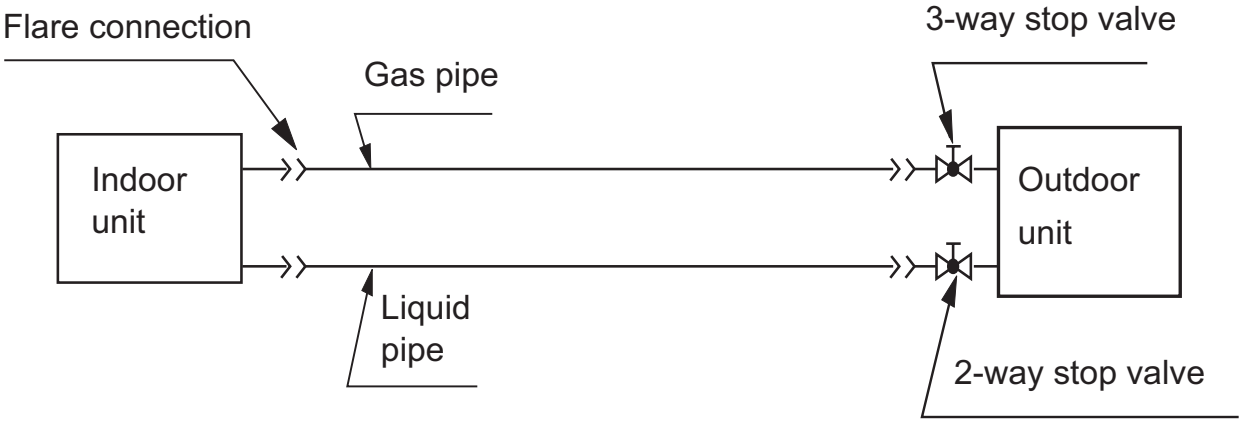

Piping size

Liquid pipe	Φ 9.52x0.8mm
Gas pipe	Φ 15.88x1.0mm

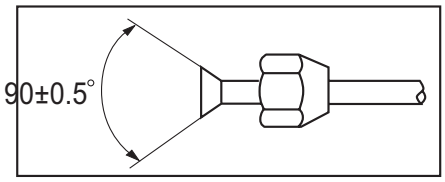

- Connect the flare nuts to the pipes, and then flare the pipes.

Все каталоги и инструкции здесь: http://splitoff.ru/tehn-doc.html

Precautions for refrigerant piping

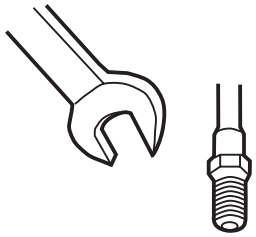

- Do not twist or crush piping.
- Be sure that no dust is mixed in piping.
- Bend piping with as wide angle as possible.
- Keep insulating both gas and liquid piping.
- Check flare-connected area for gas leakage.

Piping connection

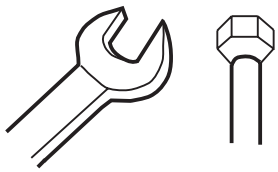

- Connecting method (indoor unit)
  Apply refrigerant oil at half union as large and flare nut.
  To bend a pipe, give the roundness as possible not to crush the pipe.
  When connecting pipe, hold the pipe centre to centre then screw nut on by hand, refer to Fig.
  Be careful not to let foreign matters, such as sands enter the pipe.

Forced fastening without centering may damage the threads and cause a gas leakage.

Pipe diameter	Fastening torque
Liquid pipe 6.35mm	14.2-17.2N·m
Liquid pipe 9.52mm	32.7-39.9N·m
Gas pipe 12.7mm	49.5-60.3N·m
Gas pipe 15.88mm	61.8-75.4N·m
Gas pipe 19.05mm	97.2-118.6N·m

Air discharging method

After finishing connection of refrigerant pipe, it shall perform air tightness test.

- The air tightness test adopts nitrogen tank to give pressure according to the pipe connection mode as the following figure shown.
  The gas and liquid valve are all in close state. In order to prevent the nitrogen entering the circulation system of outdoor unit, tighten the valve rod before giving pressure (both gas and liquid valve rods).

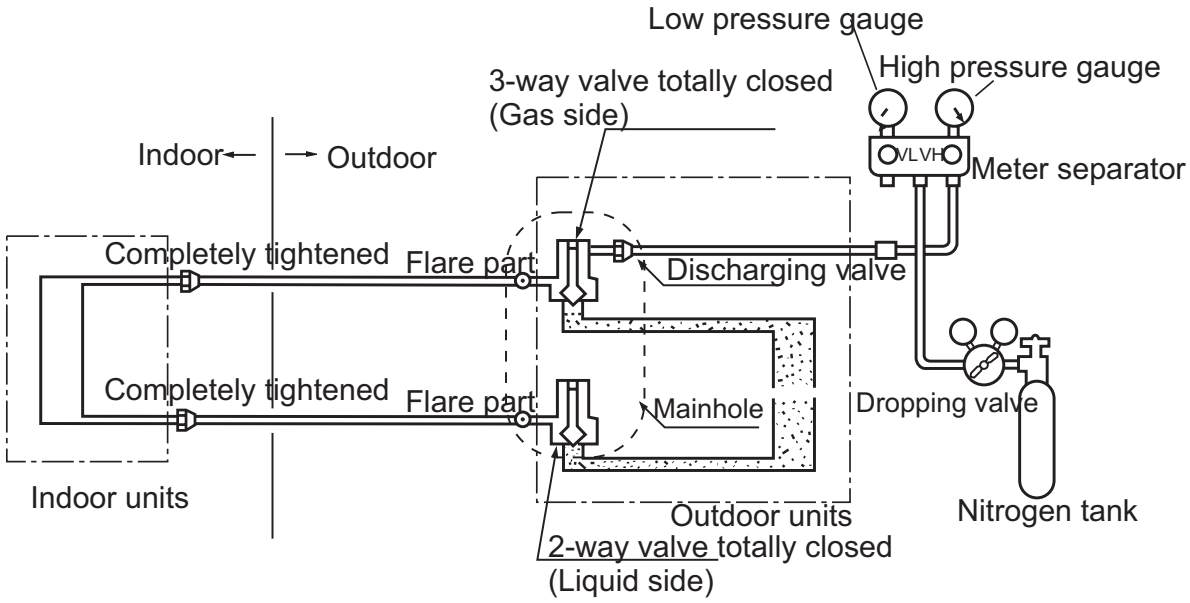

Все каталоги и инструкции здесь: http://splitoff.ru/tehn-doc.html

Precautions for refrigerant piping

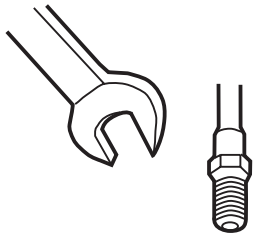

- Do not twist or crush piping.
- Be sure that no dust is mixed in piping.
- Bend piping with as wide angle as possible.
- Keep insulating both gas and liquid piping.
- Check flare-connected area for gas leakage.

Piping connection

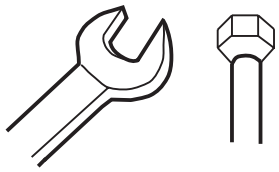

- Connecting method (indoor unit)
  Apply refrigerant oil at half union as large and flare nut.
  To bend a pipe, give the roundness as possible not to crush the pipe.
  When connecting pipe, hold the pipe centre to centre then screw nut on by hand, refer to Fig.
  Be careful not to let foreign matters, such as sands enter the pipe.

Forced fastening without centering may damage the threads and cause a gas leakage.

Pipe diameter	Fastening torque
Liquid pipe 6.35mm	14.2-17.2N·m
Liquid pipe 9.52mm	32.7-39.9N·m
Gas pipe 12.7mm	49.5-60.3N·m
Gas pipe 15.88mm	61.8-75.4N·m
Gas pipe 19.05mm	97.2-118.6N·m

Air discharging method

After finishing connection of refrigerant pipe, it shall perform air tightness test.

- The air tightness test adopts nitrogen tank to give pressure according to the pipe connection mode as the following figure shown.
  The gas and liquid valve are all in close state. In order to prevent the nitrogen entering the circulation system of outdoor unit, tighten the valve rod before giving pressure (both gas and liquid valve rods).

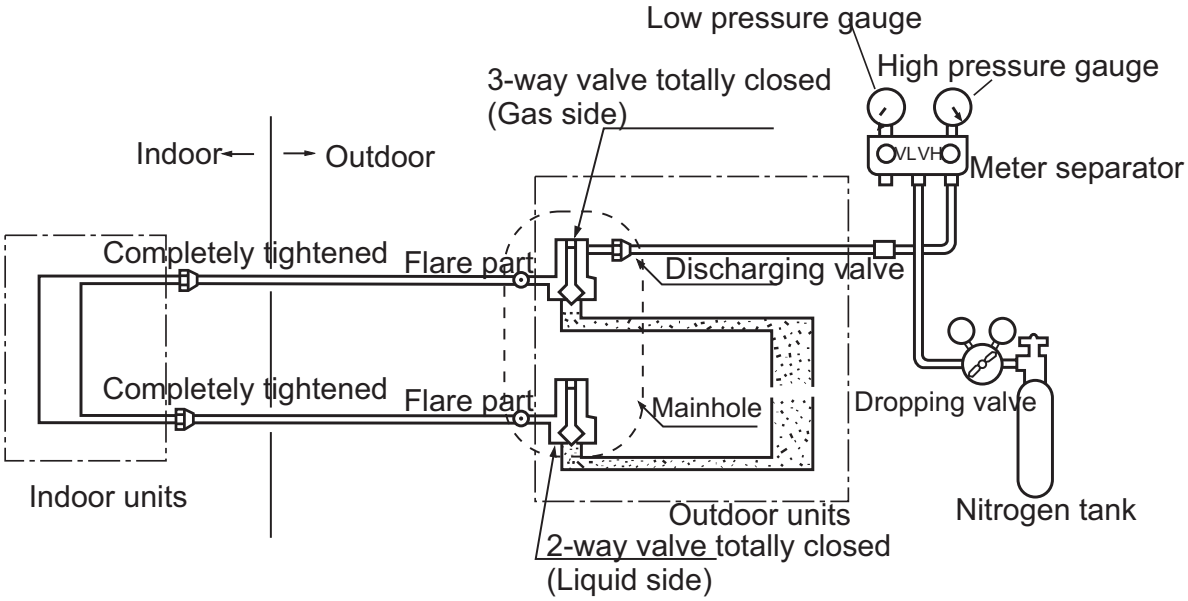

Все каталоги и инструкции здесь: http://splitoff.ru/tehn-doc.html

First step: 0.3MPa (3.0kg/cm^{2}g) pressurize over 3 minutes.
Second step: 1.5Mpa (15kg/cm^{2}g) pressurize over 3 minutes. Large leakage will be found.
Third step: 3.0 MPa (30kg/cm^{2}g) pressurize about 24 hours. Little leakage will be found.

- Check if the pressure drops
  If the pressure does not drop, the unit is passed
  If the pressure drops, please check the leaking point.

  After pressurizing for 24 hours, each 1°C difference of ambient temperature will result in 0.01MPa(0.1kg/cm^{2}g) pressure change. It shall be corrected during test.
- Checking the leaking point

  From the first to third steps, if the pressure drops, check the leakage in each joint by the sense of hearing, feeling or soap water, etc. to find the leaking point.
  After confirming the leaking point, welding it again or tighten the nut tightly again.

Piping and indoor unit vacuumizing

- Use vacuum pump to perform vacuumizing. It is strictly forbidden to use the refrigerant to remove the air inside the system.
- After air tightness test and discharging all the nitrogen, connect the vacuum pump as the following figure shown.

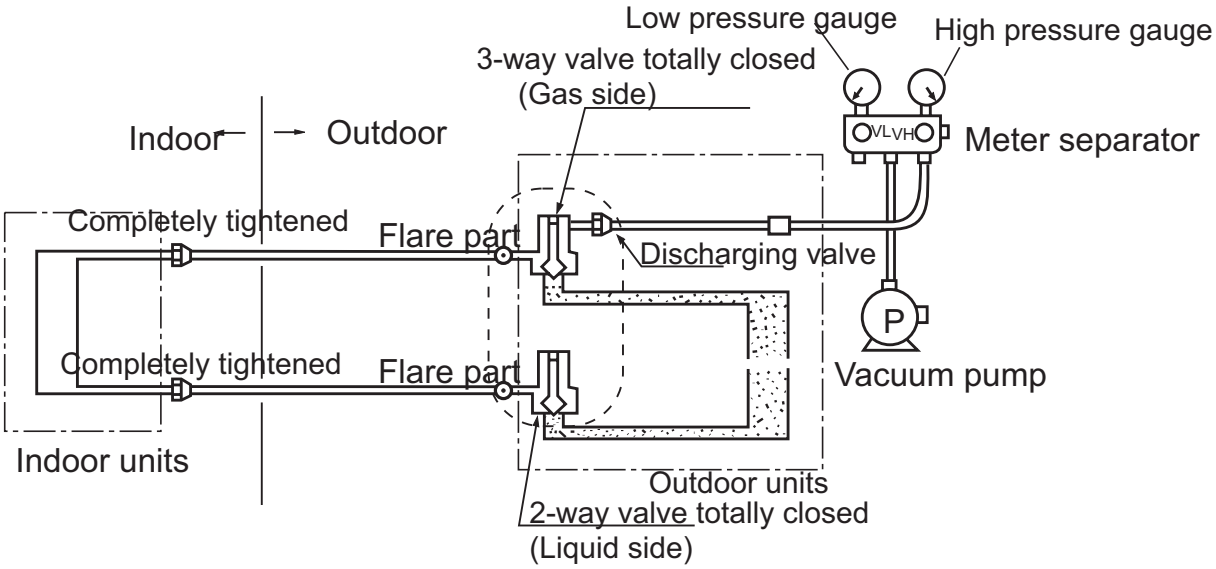

- It shall use the vacuum pump of (lower than -755mmHg)high vacuum degree and large air discharging (over 40l/min).
- The vacuumizing time depends on the length of the connecting pipe, generally is 1~2 hours. When vacuumizing, it shall be confirmed both gas and liquid side valves are closed.
- If after 2 hours vacuumizing, it cannot reach the vacuum degree below -755mmHg, it can be vacuumized for other 1 hour.
- If after 3 hours vacuumizing, it still cannot reach the vacuum degree below -755mmHg, check if there is any leaking point and repair the them.

Все каталоги и инструкции здесь: http://splitoff.ru/tehn-doc.html

- If after over 2 hours vacuumizing, the vacuum degree is below -755mmHg, close the V_L and V_H on the meter separator and stop vacuumizing. 1 hour later to confirm if the vacuum degree changes. If changes, it indicates there is leaking point in the system. Check the leaking point and repair.
- After finishing the above vacuumizing, change the vacuum pump into refrigerant pump to charge the refrigerant.

Charging amount of refrigerant

When the total length (L) of the two indoor units' connecting pipe is less than 5m, it is unnecessary to charge additional refrigerant.

If the connecting pipe (L) exceeds 5m, it shall charge Mg additional refrigerant per meter.

That is: Refrigerant charging amount = (L-5) x M (g)

For the unit with liquid pipe 6.35mm, M=30

For the unit with liquid pipe 9.52mm, M=65

Only in COOLING operation can charge the additional refrigerant.

- When charging, the refrigerant shall be charged from the charging nozzle of low pressure vavle.
- Be carefull when charging refrigerant, do not let the air mix into the system,and must charge the additional refrigerant in liquid condition.

Piping connection of outdoor unit.

Connect the connecting pipe and inlet and outlet liquid pipe according to the piping method.

Purging method

Discharge the air out of the indoor unit and the refrigerant pipe by vacuumizing

(1) Fasten all the nuts of the indoor and outdoor pipes to make these parts out of leakage.

(2) Under the condition of the complete close of the indoor and outdoor valve center (both liquid and gas side),dismount the repair valve cap.Vacuumizing through the charge mouth of the repair valve.

(3) After vacuumizing fasten the repair valve,and dismount the cap of the big and small stop valve,then loosen the stop valve center completely and fasten the big and small stop valve.

Extra charging amount of the refrigerant

When piping is longer than 5 m, charge additional refrigerant specified in this list.

Pipe length	5m	10m	15m	20m	25m	30m
Refrigerant charge (g)	——	375	750	1125	1500	1875

Все каталоги и инструкции здесь: http://splitoff.ru/tehn-doc.html

5.2 Indoor unit installation

Display of whole unit

- Try to bring the packed unit to the installation place.
- When it is necessary to unpack the unit, be careful not to damage the unit. Wrap it with nylon etc.
- After unpacking, be sure to place the unit with the front side to be up.

Note: When delivering, don't hold plastic parts such as inlet or outlet grill etc.

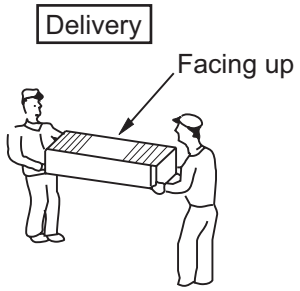

Fixing of the unit

Position of the wall hole

- Wall hole should be decided according to installtion place and piping direction. (refer to installation drawings)

Making a hole

- Drill a hole of 70mm dia. with a little slope towards outside.
- Install piping hole cover and seal it with putty after installation.

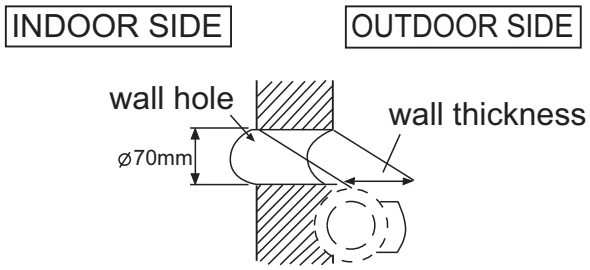

(Cross section of wall hole)

With the unit set up vertically,fix the fitting metal to the unit with screws, then fix the fitting metal to the wall with cement nail and washer, as shown below:

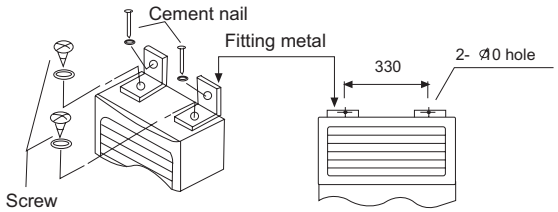

Moreover, if want to fix the unit more firmly, you should fix the bottom panel to the ground with concrete bolts,as shown below:

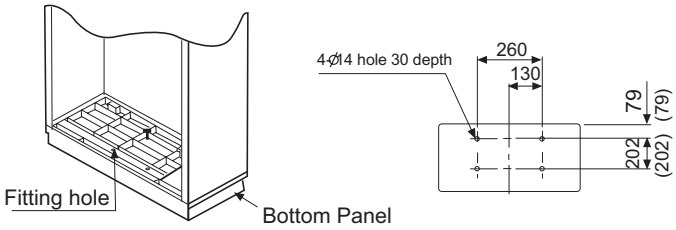

Все каталоги и инструкции здесь: http://splitoff.ru/tehn-doc.html

Installation of anti-fall plate:

Fix the anti-fall plate to the wall with screws so that there is no clearance between them.
With the unit set up vertically, fix the anti-fall plate to the unit with screws while making an adjustment at the long portion of the hole so that there is no clearance between the upper surface and the anti-fall plate.

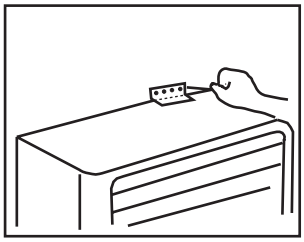

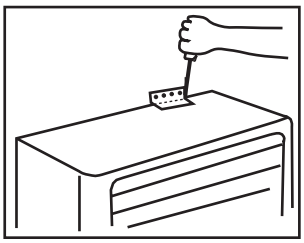

Installation of L-shaped metal

Fix to the unit with screws so that there is no clearance between the anti-fall plate and the unit.
After confirming that the unit has been set up vertically to the floor, fix it to the floor with bolt.

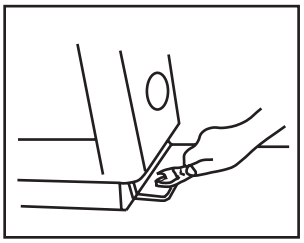

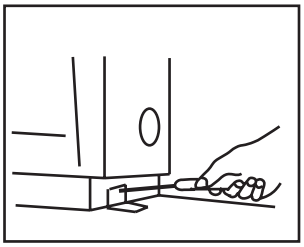

Piping connection

1. Connecting method

Apply refrigerant oil at half union and flare nut.
To bend a pipe, give the roundness as large as possible not to crash the pipe.
When connecting pipe, hold the pipe centre to centre then screw nut on by hand,refer to Fig.
Be careful not to let sundries, such as sands enter the pipe.

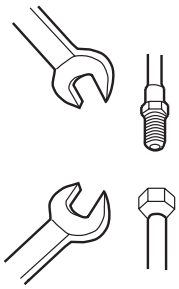

Forced fastening without centering may damage the threads and cause a gas leakage.

Pipe dia	Fastening torque
Liquid pipe 9.52mm(3/8")	29.4N·m
Gas pipe 19.05mm(3/4")	117.7N·m

2. Piping connection of indoor unit

Arrangement of piping and drainage pipe

After opening inlet grill, you will see a control box as shown in the Fig.
Remove the cover before wiring work.

Все каталоги и инструкции здесь: http://splitoff.ru/tehn-doc.html

Cut away, with a hammer or a saw, the lid for piping according to piping direction.

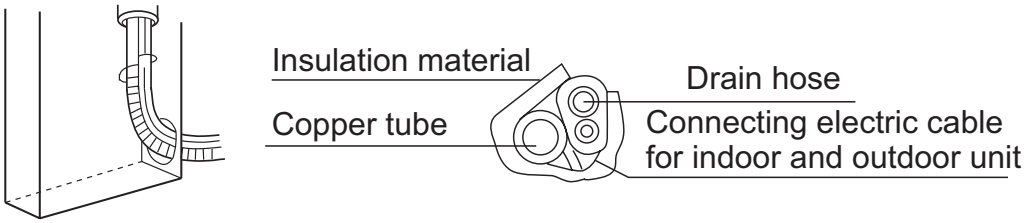

According to the piping method, connect the piping on indoor unit with union of connecting pipe.
Arrange the piping as per the wall hole and bind drain hose connecting electric cable and piping together with polyethylene tape.
Insert the bound piping connecting electric cable and drain hose through wall hole to connect with outdoor unit.

Arrangement of drain hose

- Drain hose shall be placed in under place.
- There should be a slope when arrange drain hose. Avoid up and down waves in drain hose.

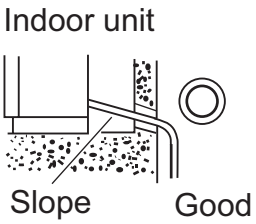

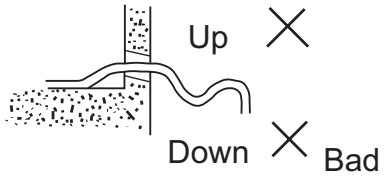

If humidity is high, drain pipe(especially in room and indoor unit) must be covered with insulation material.

Все каталоги и инструкции здесь: http://splitoff.ru/tehn-doc.html

Electric wiring

Note:

Electric wiring must be done by qualified person.

Use copper wire only, the parameter of connecting cable is H07RN-F 4G 0.75mm^2.

The power cable should be over 5G2.5mm^2, the power cable is self-provided.

The power supply connects from the outdoor unit.

Wiring of indoor unit

Insert the cable from outside the wall hole where piping already exist.

Pull it out from front.

Loosen terminal screws and insert cable end fully into terminal block, then tighten it.

Pull the cable gently to make sure it is tight.

Replace cover after wiring.

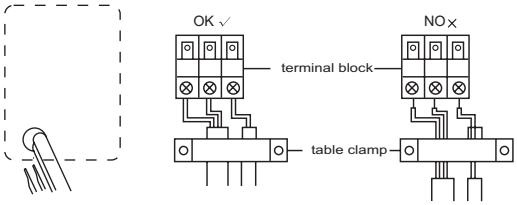

Wiring of outdoor unit

Insert the cable from inside the wall hole where piping already exists.

Pull it out from front.

Loose terminal screw and insert cable end fully into terminal block, then tighten it.

Pull the cable gently to make sure it is tight.

Replace cover after wiring.

HPU-42CV03 HPU-42HV03

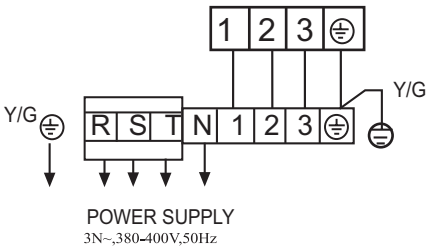

Note:

- When connecting indoor and outdoor wire, check the number on indoor and outdoor terminal blocks. Terminals of same number and same color shall be connected by the same wire.
- Incorrect wiring may damage air conditioner's controller or cause operation failure.

Все каталоги и инструкции здесь: http://splitoff.ru/tehn-doc.html

Indoor & outdoor unit connection

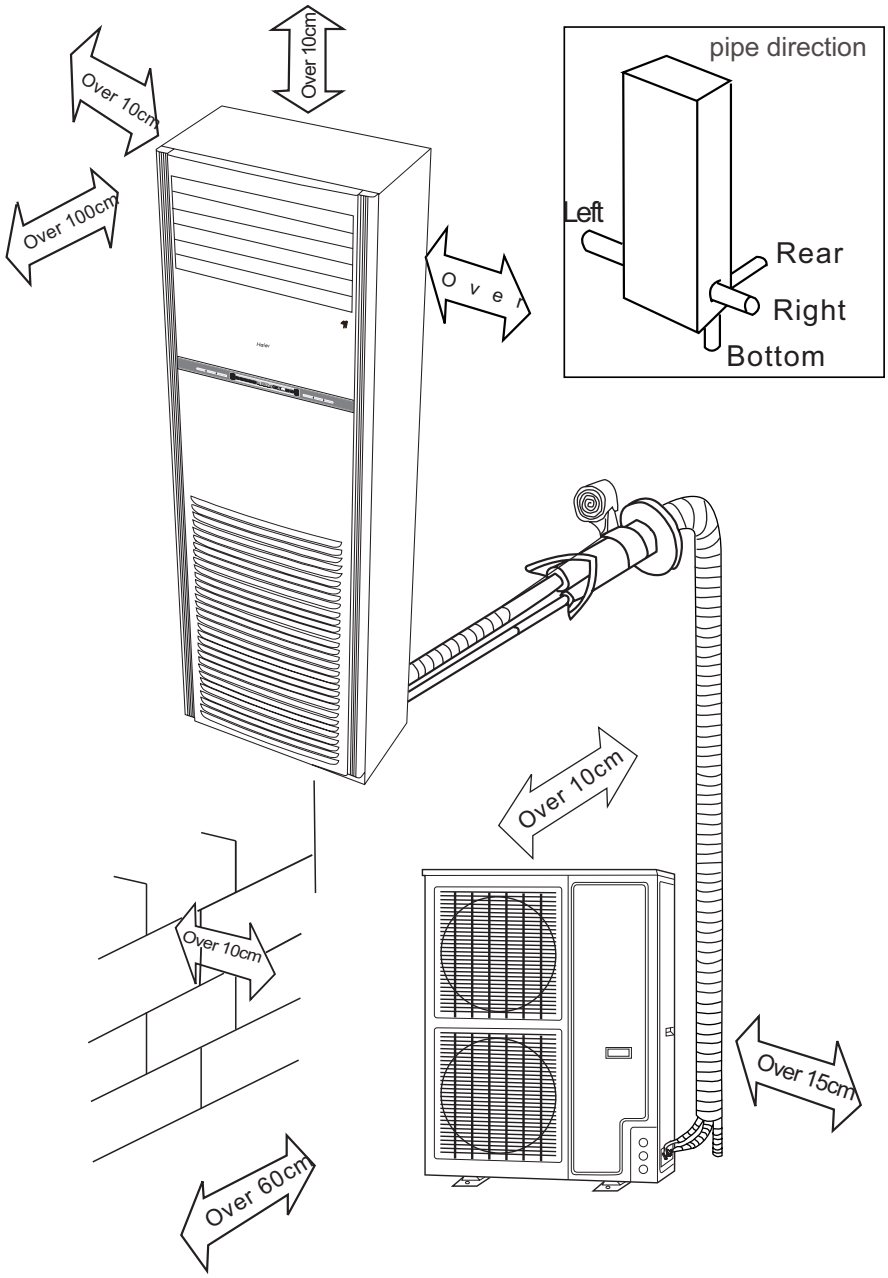

Все каталоги и инструкции здесь: http://splitoff.ru/tehn-doc.html

6. Parts and Functions

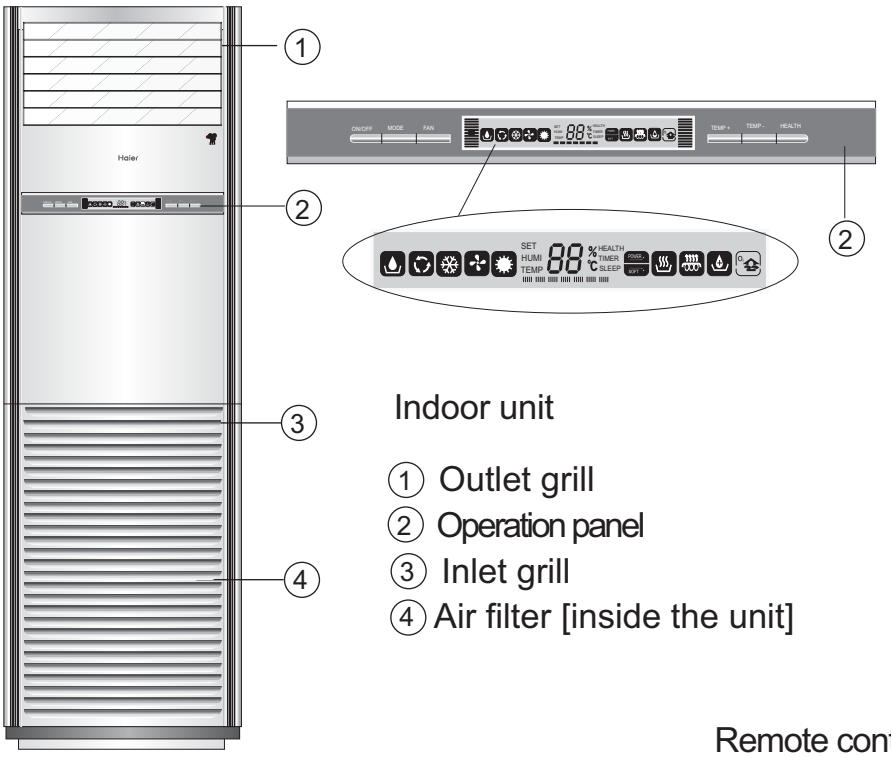

Indoor unit

① Outlet grill
② Operation panel
③ Inlet grill
④ Air filter [inside the unit]

Remote controller

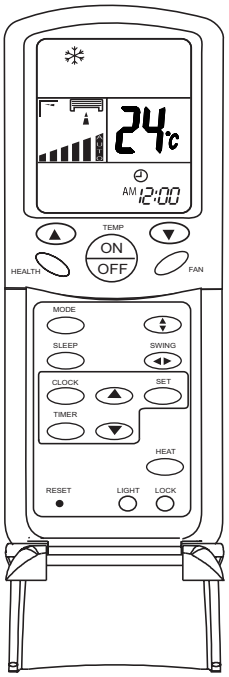

Outdoor unit

① Inlet grill
② Outlet grill

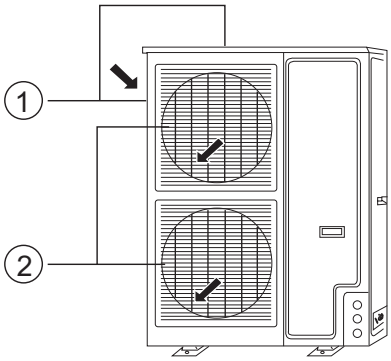

Все каталоги и инструкции здесь: http://splitoff.ru/tehn-doc.html

7. Infrared controller functions

Remote controller YR-H49

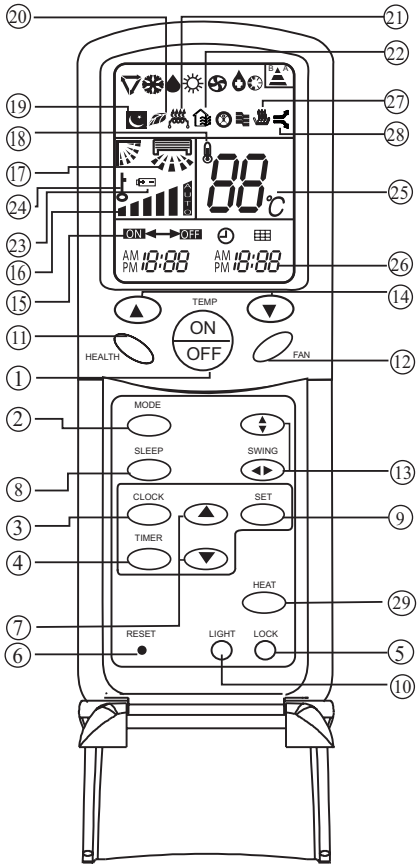

①Power ON/OFF
Used for unit start and stop.

② MODE
Used to select AUTO run,COOL, DRY, HEAT and FAN operation.

③CLOCK
Used to set correct time.

④TIMER
Used to select TIMER ON, TIMER OFF, TIMER ON/OFF.

⑤LOCK
Used to lock buttons and LCD display.

⑥ RESET
Used to reset the controller back to normal condition.

⑦ HOUR
Used to set clock and timer setting.

⑧SLEEP
Used to select sleep mode

⑨SET
Used to confirm Timer and Clock setting.

⑩ LIGHT
Control the light up and go out of the control panel's background light source and control the switch of the buzzer.

⑪HEALTH
Used to set Health operation function

⑫FAN
Used to select fan speed: AUTO, LOW FAN, MED FAN, HIGH FAN.

⑬SWING
Used to set UP/DOWN air sending and RIGHT/LEFT air sending direction.

⑭ TEMP
Used to set temp.,temp. range:16°C~30°C

⑮Timer ON/OFF display

⑯ Fan speed and air sending direction display

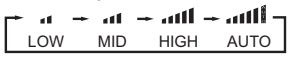

⑰Swing direction display

⑱Room temperature display

⑲Sleep state display

⑳Health display
Display when set Health operation function.

㉑Electric Heating display

㉒Fresh Air state display

㉓Battery Capacity display
Display when the electric power of the battery is insufficient.

㉔Lock state display

㉕Temperature display
Used to display the set temperature and room temperature.

㉖ Clock display

㉗ Humidifying display

㉘ Power/Soft operation display

㉙HEAT
Select Auxiliary electric heater

Note: All the above functions will be a little different for the specific models.

Все каталоги и инструкции здесь: http://splitoff.ru/tehn-doc.html

Operation instructions

Clock set

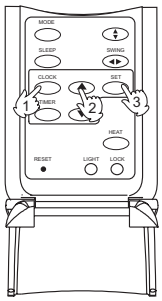

When unit is started for the first time
and after replacing batteries in remote
controller, clock should be adjusted as follows:
Press CLOCK button, "AM"or "PM" flashes.
Press ▲ or ▼ to set correct time. Each press will increase
or decrease 1 min . If the button is kept pressed, time will change quickly.
After time setting is confirmed, press SET, "AM" and "PM"
stop flashing, while clock starts working.

Remote controller's operation

- When in use, put the signal transmission head directly to the receiver hole on the indoor unit
- The distance between the signal transmission head and the receiver hole should be within 7m without any obsacles as well.
- Don't throw the controller, prevent it from being damaged.
- When electronic-started type fluorescent lamp or change-over type fluorescent lamp or wireless telephone is installed in the room, the receiver is apt to be disturbed in receiving the signal so the distance to the indoor unit should be shorter.

Loading of the battery

Slightly press " ▼ " and push down the cover.
Load the batteries as illustrated.
2 R-03 dry batteries, (cylinder)
Be sure that the loading is in line with the "+"/"-" pole
request as illustrated.
Put on the cover again.

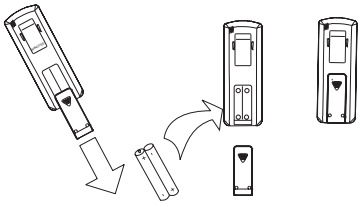

2R-03 dry batteries

Confirmation indicator:

In disorderation, reload the batteries or load the new batteries after 5 mins.

Note:The waster batteries should be disposed properly,use two new same-type batteries when loading.

If the remote controller can□t function normally or doesn□t work at all,use a sharp-pointed item to press the reset key.

Hint:Remove the batteries in case unit won□t be in usage for a long period.
If there are any displays after taking-out just need to press reset key.
When throw away the waste batteries, please perform in accordance with the local regulation.

Auto Mode

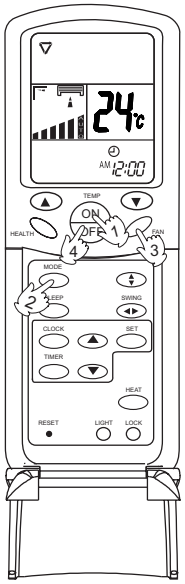

① Press ON/OFF button
Unit starts running.
The previous status appears on the display
(except. TIMER, SLEEP mode)

② Press MODE button. For each press, operation mode changes as follows:

Select Auto run,
" ▽ " appears and auto run starts.

Все каталоги и инструкции здесь: http://splitoff.ru/tehn-doc.html

③ Select temp. button
Press TEMP button
▲ Every time the button is pressed, temp. setting increases 1℃
▼Every time the button is pressed, temp. setting decreases 1℃
If the button is kept pressed, setting will increase or decrease quickly.

④ Press FAN,For each press, operation mode changes as follows:

Remote controller

Unit runs at the speed displayed on LCD.
When fan speed is AUTO,it is changed automatically according to the indoor temperature.

⑤ Press ON/OFF button
Unit stops running.

Note:
During Auto run operation, temp. setting will be shown in LCD display, unit will select heating, cooling or fan operation according to the room temp.

Cooling Mode

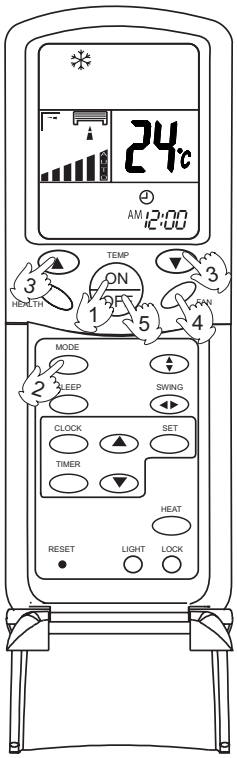

① Press ON/OFF button
Unit starts running.
The previous status appears on the display (except. TIMER, SLEEP mode)

② Press MODE button. For each press, operation mode changes as follows:

Remote controller

Select cooling operation, Shows"❄"
Cooling operation starts.

③ Select temp. button
Press TEMP button
▲ Every time the button is pressed, temp. setting increases 1℃
▼ Every time the button is pressed, temp. setting decreases 1℃
If the button is kept pressed, setting will increase or decrease quickly.

④ Press FAN button. For each press, fan speed changes as follows:

Remote controller

Unit runs at the speed displayed on LCD.
When fan speed is AUTO,it is changed outomatically according to the indoor temperature.

⑤ Press ON/OFF button
Unit stops running,and when entry this mode for the next time,it will show the previous setting.

Все каталоги и инструкции здесь: http://splitoff.ru/tehn-doc.html

Dry Mode

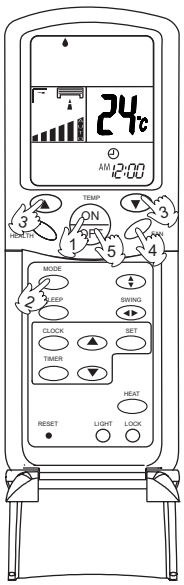

① Press ON/OFF button
Unit starts running.
The previous status appears on the display
(except. TIMER, SLEEP mode)

② Press MODE button. For each press, operation mode changes as follows:

Remote controller → AUTO → COOL → DRY → FAN → HEAT

Select Drying operation shows"💧"
Dry operation starts

③ Select temp. button
Press TEMP button
▲Every time the button is pressed, temp. setting increases 1°C
▼Every time the button is pressed, temp. setting decreases 1°C
If the button is kept pressed, setting will increase or decrease quickly.

④ Press FAN button. For each press, fan speed changes as follows:

Remote controller → LOW → MID → HIGH → AUTO

Unit runs at the speed displayed on LCD.
In DRY mode, when room temp.becomes 2 C lower than temp. setting,unit will run intermittently at LOW speed regardless of FAN setting.

⑤ Press ON/OFF butto nUnit stops running, and when entering this mode for the next time, it will show the previous setting

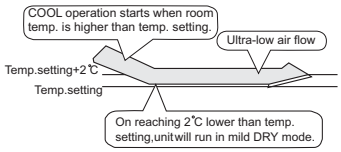

Fan Mode

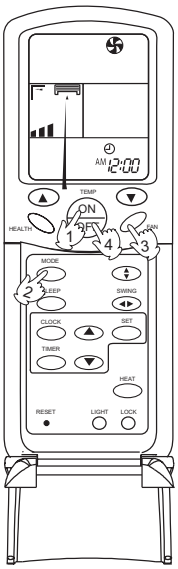

① Press ON/OFF button
Unit starts running.The previous status appears on the display
(except. TIMER, SLEEP mode)

② Press MODE button. For each press,operation mode changes as follows:

Remote controller → AUTO → COOL → DRY → FAN → HEAT

Select Fan operation shows "", Fan operation starts.

③ Press FAN button. For each press, fan speed changes as follows:

→ LOW → MID → HIGH

Unit runs at the speed displayed on LCD.

Все каталоги и инструкции здесь: http://splitoff.ru/tehn-doc.html

④ Press ON/OFF button
Unit stops running, and when entering this mode for the next time, it will show the previous setting.

Note:
In this mode, temp. can't be selected, temp.setting will not be shown in LCD display.In Fan operation mode, "AUTO" fan speed is not available. Operation cycles are as follows:

→ LOW → MID → HIGH →

Heating Mode

Note: For cooling only type, this function is invalid.

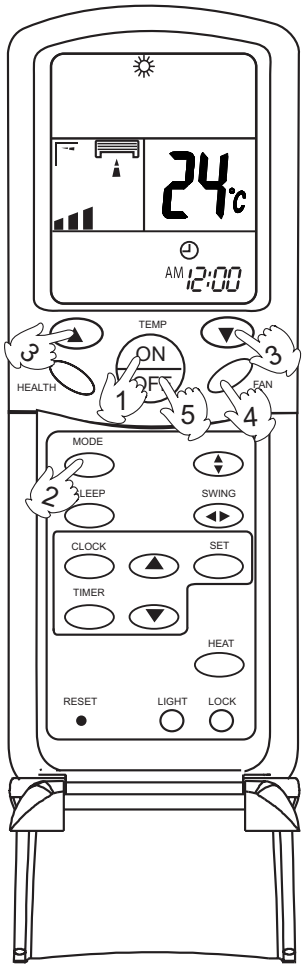

① Press ON/OFF button
Unit starts running.
The previous status appears on the display (except. TIMER, SLEEP mode)

② Press MODE button. For each press,operation mode changes as follows:

→ AUTO → COOL → DRY → FAN → HEAT →

Select Heating operation " ☼ " appears and Heating operation starts.

③ Select temp. button
Press TEMP button
▲Every time the button is pressed, temp. setting increases 1℃
▼Every time the button is pressed, temp. setting decreases 1℃
If the button is kept pressed, setting will increase or decrease quickly.

④ Press FAN button. For each press, fan speed changes as follows:

→ LOW → MID → HIGH → AUTO →

In heat mode,warm air will blow out after a short period of time due to cold-draft prevention function.

⑤ Press ON/OFF button
Unit stops running, and when entering this mode for the next time, it will show the previous setting.

Все каталоги и инструкции здесь: http://splitoff.ru/tehn-doc.html

Air flow adjustment

Swing louvers
(Vertical louvers)
(Horizontal louvers)

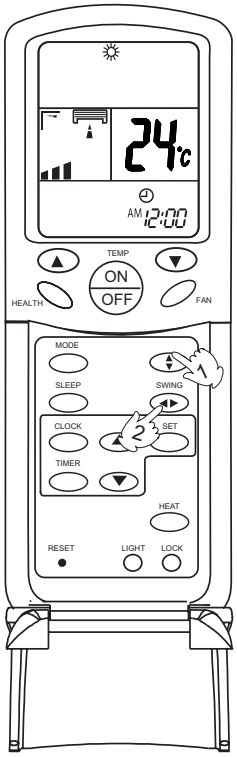

Up and down

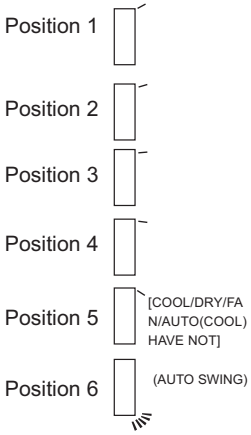

Side from side

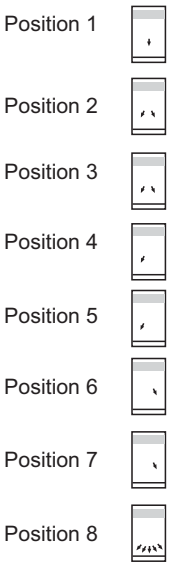

Side from side

Swing ◀▶

- Press SWING ◀▶ the vertical louvers move from side to side.

Fixed position ◀▶

- Press the SWING ◀▶ again to fix the vertical louvers at your desired position.

Swing ▲▼

- Press SWING ▲▼ the horizontal louvers move from up to down.

Fixed position

- Press the SWING ▲▼ again to fix the horizontal louvers at your desired position.

Note: Put louvers at up position in cooling and down position in heating mode. This will be helpful to keep an even room temp.

Notice: In cooling or dry operation, don't put horizontal louvers at downward position for a long time, or outlet grill might get frosted. Don't expose your skin to cool or warm air for a long time.

SLEEP Mode

Remote control unit

Before go to bed, you can press the Sleep button, the air conditioner will operate in comfortable sleep mode to make your sleep more comfortable.

Все каталоги и инструкции здесь: http://splitoff.ru/tehn-doc.html

Usage of the Sleep function

After starting, set the Run mode and press the Sleep button.

Run mode

1. In cooling and dry

After starting of the Sleep operation, the temperature Will be raised for 1˚C higher than the set temperature 1 hour later,and be raised for 1˚C after another hour. It continues under that condition for 6 hours, then the machine will be switched off. The temperature is higher than the set temperature so as to avoid catching cold in sleeping.

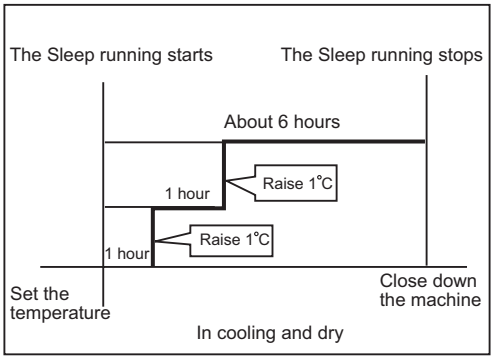

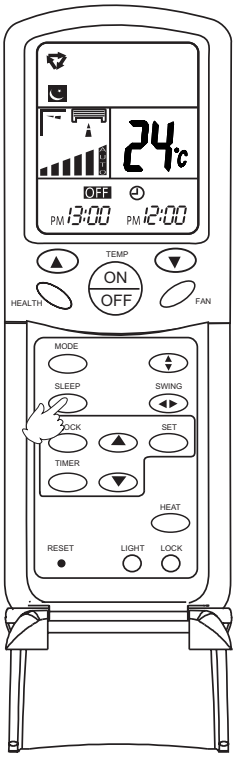

2. In heating (the single-cooling conditioners do not have the function)

After the Sleep running starts, the temperature will drop for 2 C after another one hour. The temperature will raise for 1˚C after 3 hours running under the above temperature, and the conditioner will be closed down after running for 3 hours. The temperature is lower than the set temperature so as to avoid uneasiness in sleeping.

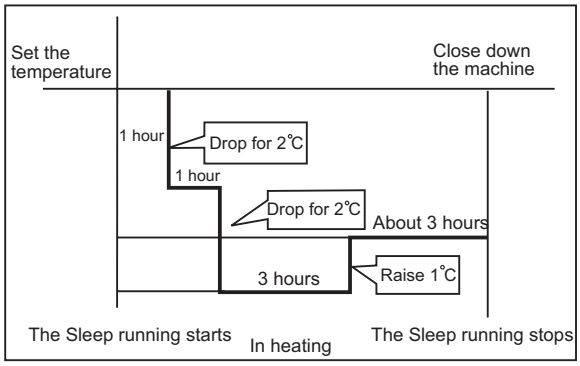

3. In automatic running

The conditioner will run under automatically selected working mode of sleeping.

4. In Fan running

The Sleep function is invalid.

Timer on/off operation

Remote control unit

TIMER operation

Set Clock correctly before starting Timer operation (refer to page 2)

You can let unit start or stop automatically at following times: Before you wake up in the morning, or get back from outside or after you fall asleep at night.

TIMER ON/OFF

(1) After unit start, select your desired operation mode.

Operation mode will be displayed on LCD.

(2) TIMER mode selection

Press TIMER button to change TIMER mode.

Every time the button is pressed, display changes as follows:

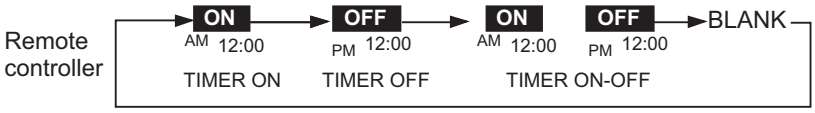

Select your desired TIMER mide (TIMER ON or TIMEROFF) ON or OFF will flash.

Все каталоги и инструкции здесь: http://splitoff.ru/tehn-doc.html

(3) Timer setting

Press HOUR▲ / ▼ button.

▲Every time the button is pressed, time increases 1 min, If button is kept pressed, time will change quickly.

▼Every time the button is pressed, time decreases 1 min, If button is kept pressed, time will change quickly. Time will be shown on LCD. It can be adjusted within 24 hours.

(4) Confirming your setting

After setting correct time, press SET button to confirm, " ON "
or " OFF " stops flashing.
Time displayed: Unit starts or stops at x hour x min (TIMER ON or TIMER OFF)
Timer mode indicator on indoor unit lights up.

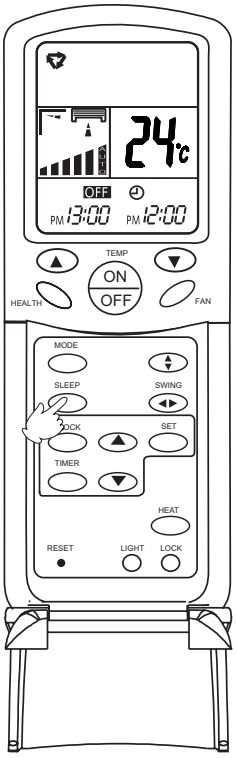

To cancel TIMER mode

Just press TIMER button several times until TIMER mode disappears.

Hints

After replacing batteries or a power failure happens, Time setting should be reset.
Remote controller possesses memory function when use TIMER mode next time, just Press SET button after mode selecting if timer setting is the same as previous one.

Timer on-off function

Remote controller operation TIMER ON-OFF

(1) After unit start, select your desired operation mode.

Operation mode will be displayed on LCD.

(2) TIMER mode selection

Press TIMER button to change TIMER mode.
Every time the button is pressed, display changes as follows:

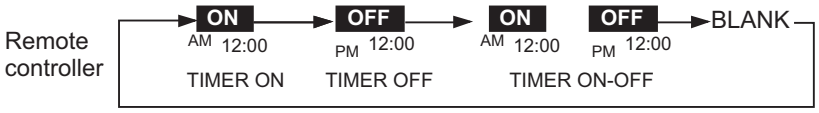

Select your desired TIMER mide (TIMER ON or TIMEROFF) ON or OFF will flash.

(3) Timer setting for TIMER ON

Press HOUR button.

▲ Every time the button is pressed, time increases 1 min. If button is kept pressed, time will change quickly.

▼Every time the button is pressed, time decreases 1 min. If button is kept pressed, time will change quickly.

Time will be shown on LCD.
It can be adjusted within 24 hours.
AM refers to morning and PM to afternoon.

(4) Time confirming for TIMER ON

After time setting, press TIMER button to confirm," ON " stops blinking, while " OFF " starts blinking.

(5) Time setting for TIMER OFF

Follow the same procedure in "Time setting for TIMER ON".

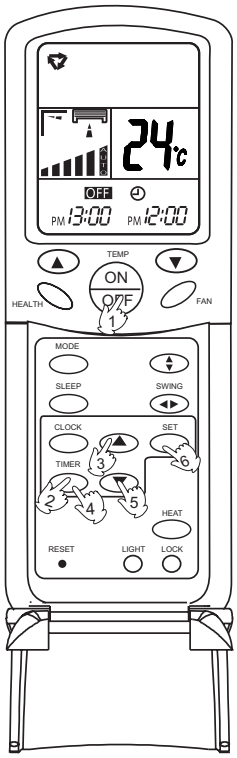

Все каталоги и инструкции здесь: http://splitoff.ru/tehn-doc.html

(6) Time confirming for TIMER OFF

After time setting, press SET button to confirm, " OFF " stops flashing.

Time displayed: Unit start or stop at x hour x min

To cancel TIMER mode

Just press TIMER button several times until TIMER mode disappears.

According to the Time setting sequence of TIMER ON or TIMER OFF,either ON-OFF or OFF-ON can be achieved.

Health & Fresh Air operation

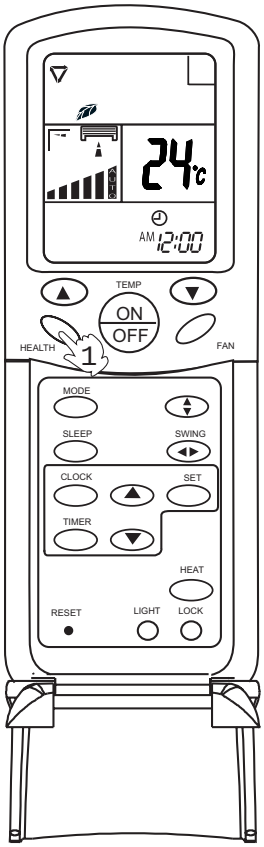

Health operation

After turning on the unit and set the desired working mode. Press the Health button, the LCD will display " ", the unit begins health operation (start the negative ion generation device). Press the Health button again, the " " displayed on the LCD disappears, health operation is cancelled (turn off the negative ion generation device).

Note: When indoor fan motor does not work, the unit will automatically turn off negative ion generation device.

About Health operation

After the start of Health operation, the negative ion generator will generate large amount of negative ion, which can effectively balance the amount of positive & negative ion in the air and has the bacteria-killing and accelerating the dust deposition of the room to make the room air fresh and healthy.

Auto restart function

Setting method (to be applied for a necessary situation) :

Setting Method: When the remote controller is on (excluding timer mode and fan mode), press the "SLEEP" button on the remote controller 10 times within 5 seconds, and after the buzzer rings 4 times, the air conditioner will enter the state of auto restart.

Cancel Method: Press the "SLEEP" button on the remote controller 10 times within 5 seconds, and after the buzzer rings 2 timer, the auto restart mode will be cancelled.

Notes: When a power failure suddenly occurs during the air conditioner is working after the power failure compensation is set, if the air conditioner will not be used for a long time, please cut off the power supply to prevent its operation from being resumed after the power is supplied again, or press the "Switch On/Off" button after the power comes again.

After the power failure compensation is set, if power failure suddenly occurs while the air conditioner is working, it will resume the previous working state when the power is supplied again.

If the unit has not the "SLEEP**" button or function, please realize the function by pressing "SWING" with the same method.**

Все каталоги и инструкции здесь: http://splitoff.ru/tehn-doc.html

Weekly timer YCS-A001

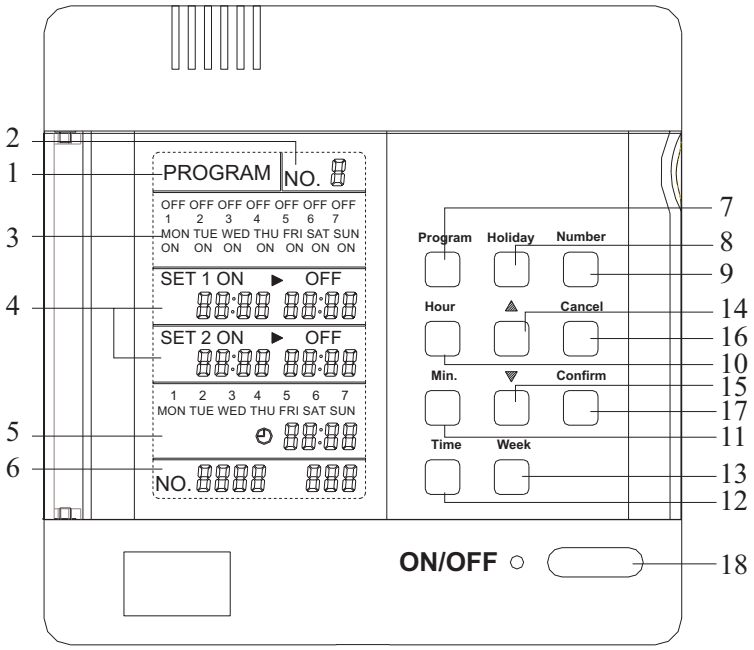

Instruction:

1 - PROGRAM-the display shows the weekly timer timing setting state, and in setting state, the timing information can be adjusted.

2 - No:8-timing group number: when it is not set timing, there is no timing group number; after setting timing, it will automatically form a group number according to each kind of setting combination, so that in the sequent timing setting, it can execute instant setting by using timing group number.

3 - Setting state and holiday functional area-1 (MON), 2 (TUE), 3 (WED), 4 (THU), 5 (FRI), 6 (SAT), 7 (SUN) are used to indicate the 7 days in a week; the symbol of this part will display after powered on; after set the corresponding weekday's timing function, the ON symbol under the corresponding symbol will display, if not set timing, there will be no display; if not set Holiday function, the OFF symbol on the upside of the indicating symbol will not display, after set Holiday function, the OFF will display and at the same time temporarily the previous timing setting and turn off the air conditioner.

4 - No. 1 group and No.2 group timing setting display area-when entering timing setting state, the contents of timing will flash; choose Date, Hour and Minute to perform increase and decrease adjustment by the adjusting key.

5 - Time display area-including display the weekday, hour and minute; before setting timing function, please calibrate the current clock.

6 - Unit number trouble code display area-when the air conditioner in the control network has trouble, the corresponding unit number and the trouble code will display in this area.

7 - Program
Enter or exit the timing setting in normal condition,

8 - Holiday
Close the units and invalid for timing in no affect on the timing setting condition.

9 - Number
Group setting and timing setting (take one day as a standard unit)

10 - Hour
Timing setting condition and time setting condition ,select the adjustment

11 - Min.
Timing setting condition and time setting condition ,select the adjustment

12 - Time
Enter and exit the at present date and time condition in normal condition

13 - Week
Timing setting condition and time setting condition ,select the adjustment

14 -Timing setting condition and time setting condition , increase the setting parameters

15 -Timing setting condition and time setting condition , decrease the setting parameters

16 - Cancel
Cancel the present setting before confirm the parameter.

17 - Confirm Confirm the parameter.

18 - ON/OFF Open/close the unit.

Все каталоги и инструкции здесь: http://splitoff.ru/tehn-doc.html

Connecting method

1. Use group controller and weekly timer to realize the group control function + weekly timing function, applicable for the units except for the unit which needs detector to realize the weekly timer function, such as cabinet type, console type.

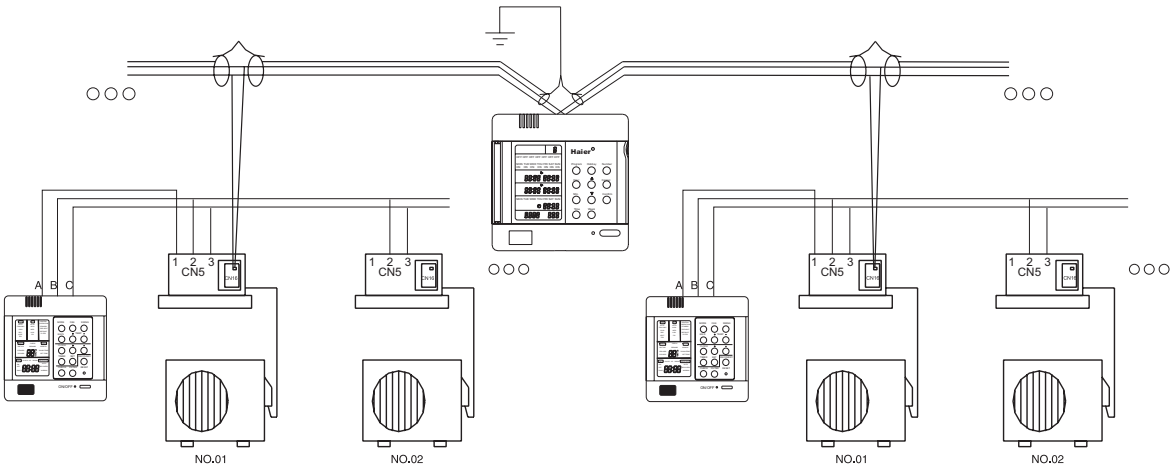

2. Use weekly timer to realize weekly timing function,applicable for the units which need detector to realize the weekly timer function, such as cabinet type, console type.

The detector is connected with one air conditioner by the 4-core screw fixed terminals A+ and A- of air conditioner interface, then accordingly set the dial-code switch of the detector in single unit working mode; the address number setting shall be performed according the planned program, for specific setting and corresponding address, please refer to the dial-code switch setting in detector's operation manual; use weekly timer to fulfill weekly timing function, the system needs to be connected with weekly timer; each detector and weekly timer is connected with shielded twisted pair communication bus by the 2-core screw fixed terminals (A and B) of its RS-485 interface; the communication bus must be shielded and grounded, and the resistors in its two ends shall be suited.

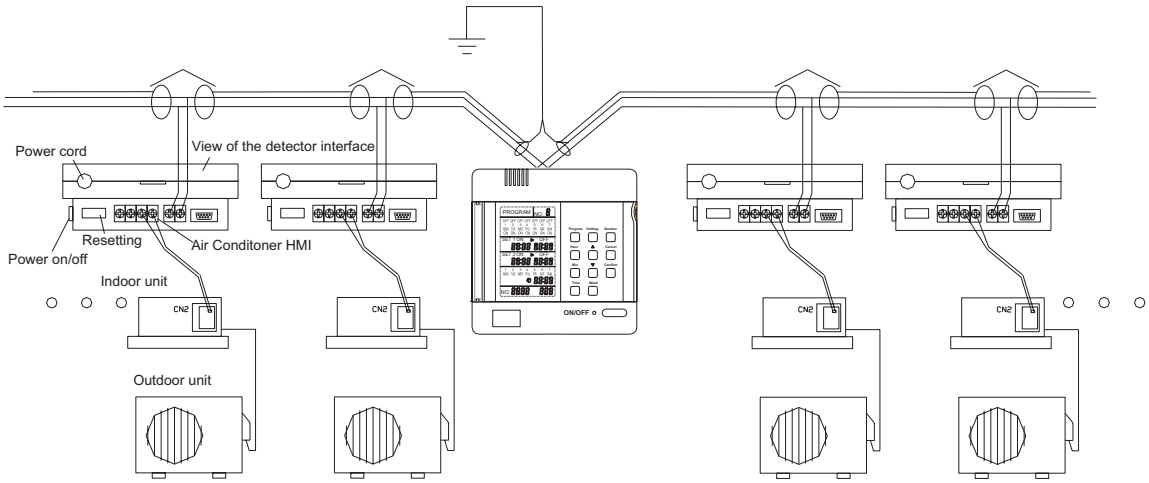

3. Use weekly timer to realize two units auto-changeover function,applicable for the units which need detector to realize the weekly timer function, such as cabinet type, console type.

The detector is connected with two same model air conditioners by the 4-core screw fixed terminals of air conditioner interface; then accordingly set the dial-code switch of the detector in double units working mode, and the double units switch time is default 24 hours; the address number setting shall be performed according the planned program, for specific setting and corresponding address, please refer to the dial-code switch setting in detector's operation manual; use weekly timer to fulfill double units switch weekly timing function, the system needs to be connected with weekly timer; each detector and weekly timer is connected with shielded twisted pair communication bus by the 2-core screw fixed terminals (A and B) of its RS-485 interface; the communication bus must be shielded and grounded, and the resistors in its two ends shall be suited.

Все каталоги и инструкции здесь: http://splitoff.ru/tehn-doc.html

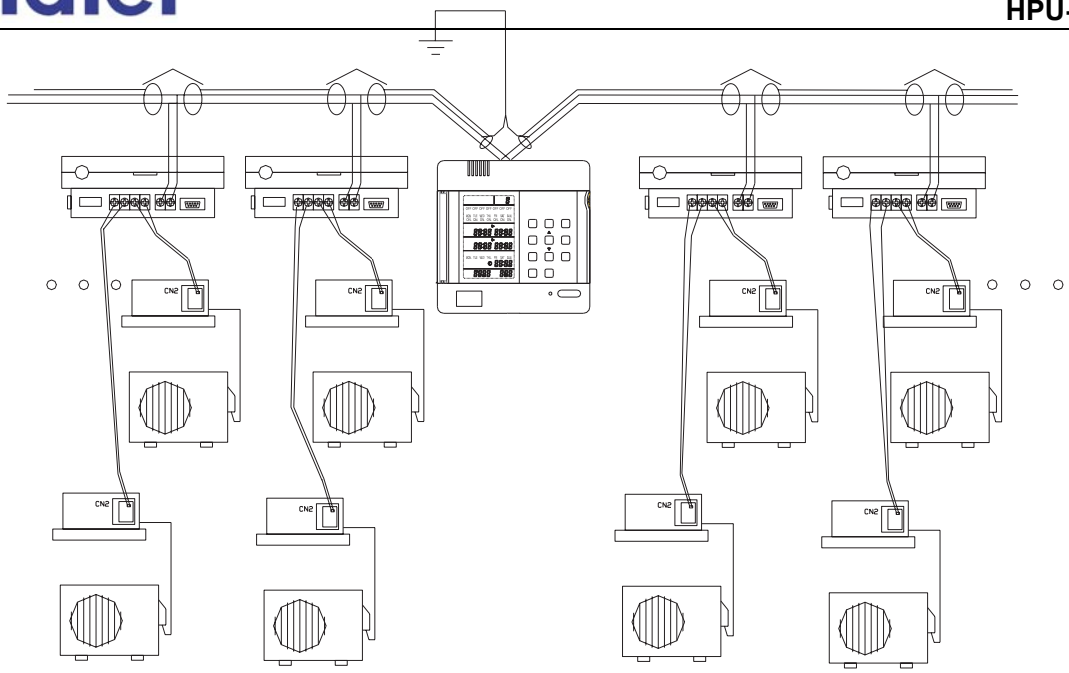

Installation dimensions

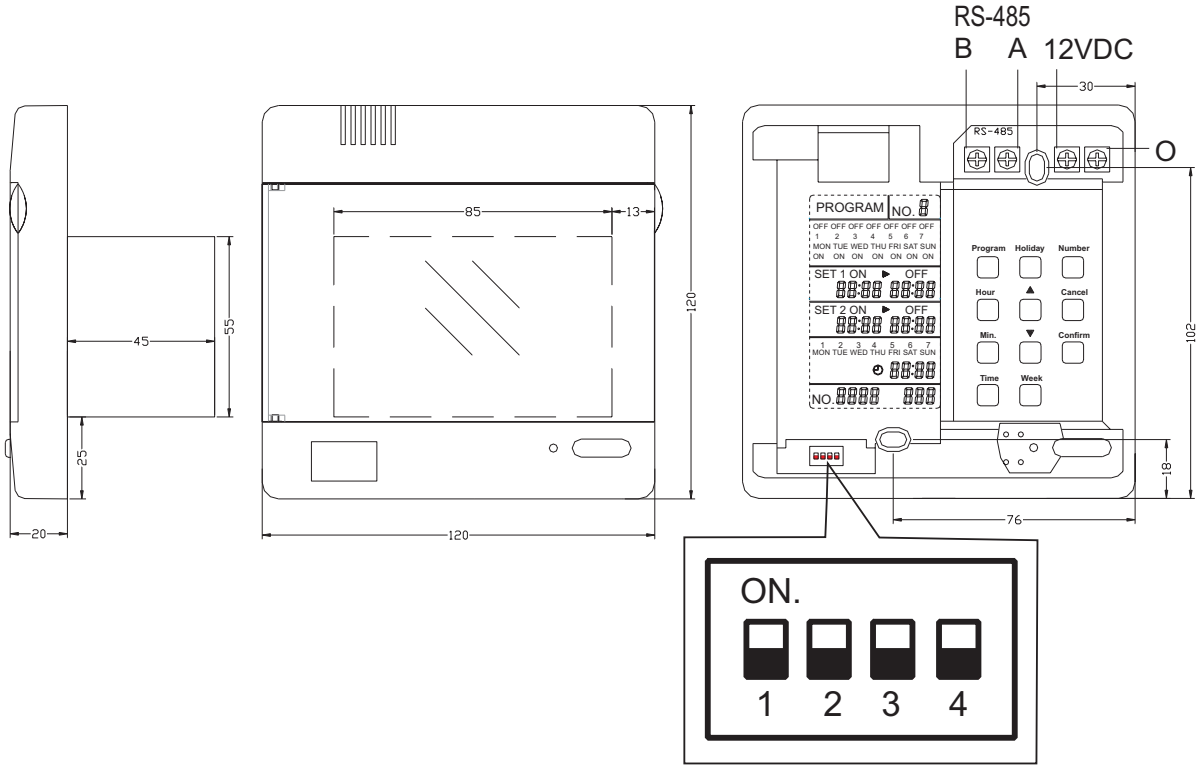

Все каталоги и инструкции здесь: http://splitoff.ru/tehn-doc.html

Central Controller YCZ-A001

Function description:

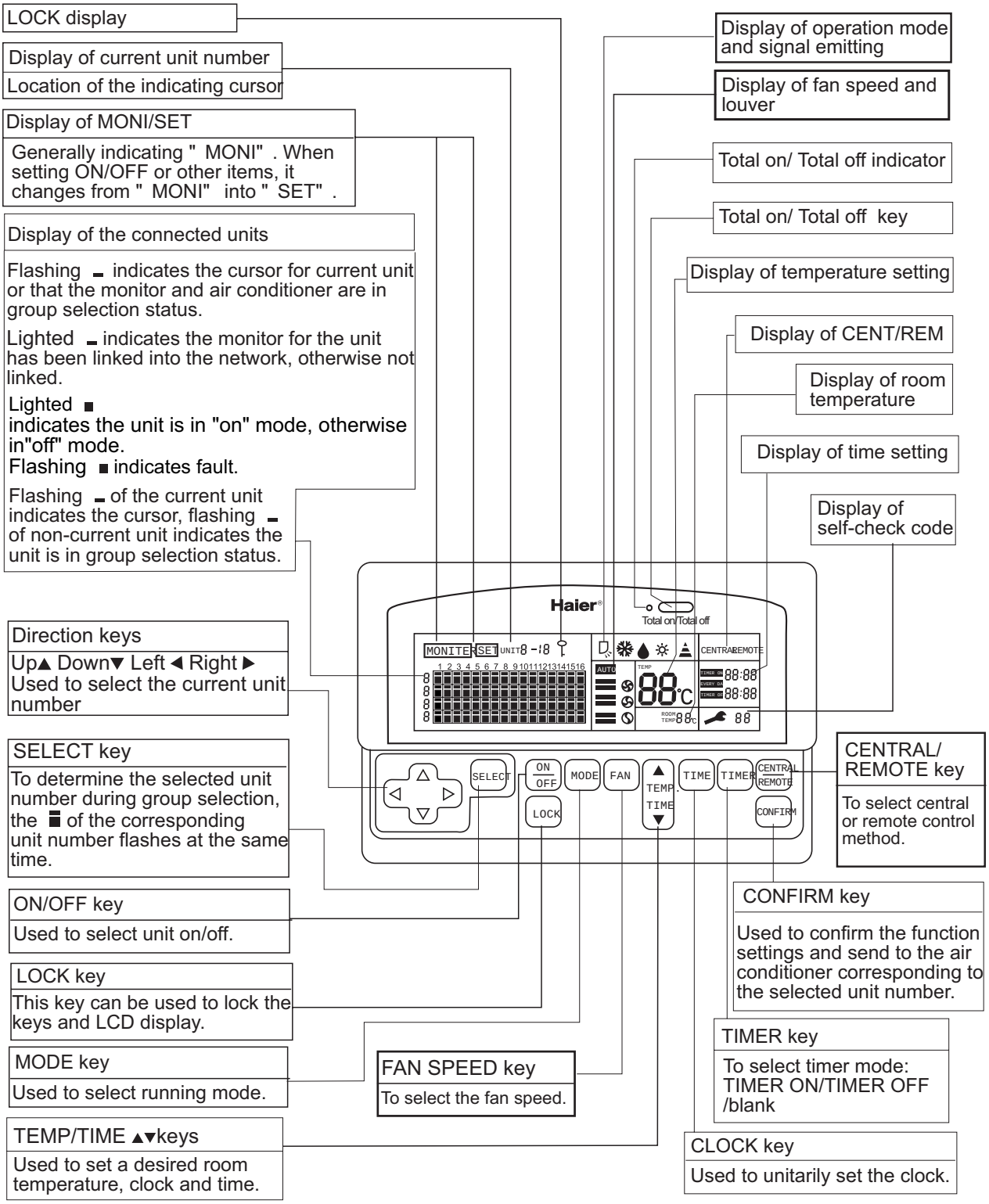

Note: In MONI mode, pressing SEL, MODE, FAN SPEED, TEMP TIME keys may change the MONI mode into SET mode. If SET key or other keys hasn' t been pressed within 10s, it will automatically return to MONI mode.

Все каталоги и инструкции здесь: http://splitoff.ru/tehn-doc.html

1. Communication function

Communicate with the indoor PCB in the group control network

To communicate with the indoor PCB through the R S-485 bus (A, B). The central controller sends commands to and receives response from indoor PCB; communication by address enables sending and receiving control information, work information and fault information between indoor PCB and the central controller.

2. LCD display function:

The LCD could display the fundamental status of air conditioning units (are the units existing? On/off? Fault? Are units group selected? Cursor and the current unit no.);

The LCD can display the working status of the air conditioning unit with the current number (mode, fan speed, temperature setting, room temperature,timer,error code, central/remote control status);

The working status of the central controller (monitor/set status, panel locking status, signaling status).

3. Key input function:

The keys for moving the current unit number cursor and for group selection: ▲,▼,▶,◀, SELECT;

The keys for setting working status of the air conditioning unit and control conditions: ON/OFF, MODE, FAN SPEED, TEMP, TIME ▲/▼, CLOCK,TIMER, CENT/REM, SET;

The key for locking key function of the central controller: LOCK.

4. Unit number setting function:

To enrich the control functions of Haier commercial air conditioner remote monitoring system, multiple controllers could be set to work together for a combination of multiple functions. For this, the central controller is provided with a two-digital switch for setting controller address.

5. Realizing central control function with the central controller(max.128 indoor units can be connected) this type is applicable for the unitary free indoor units except for cabinet type.

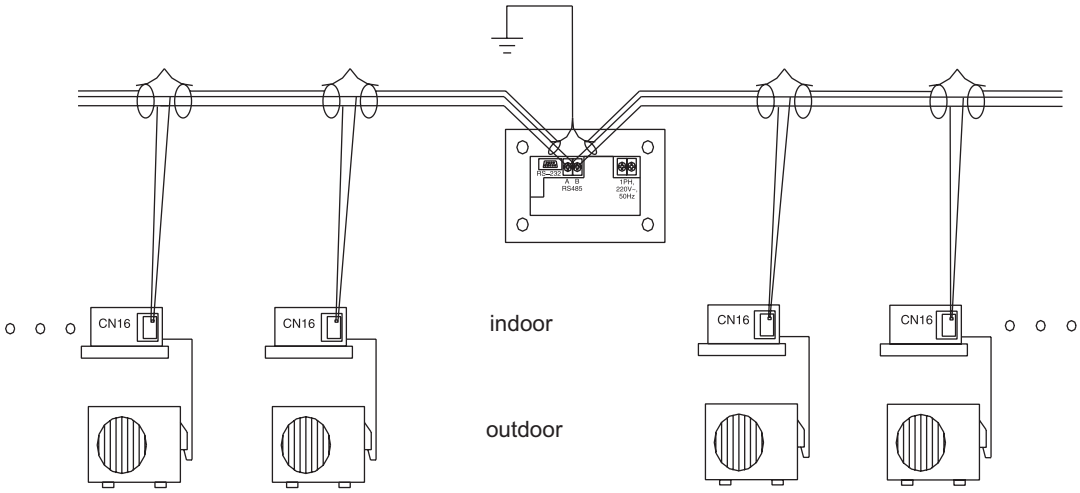

6. Central control system + Group control system(max.128 x16 indoor units can be connected),this type is applicable for the unitary free indoor units except for cabinet type.

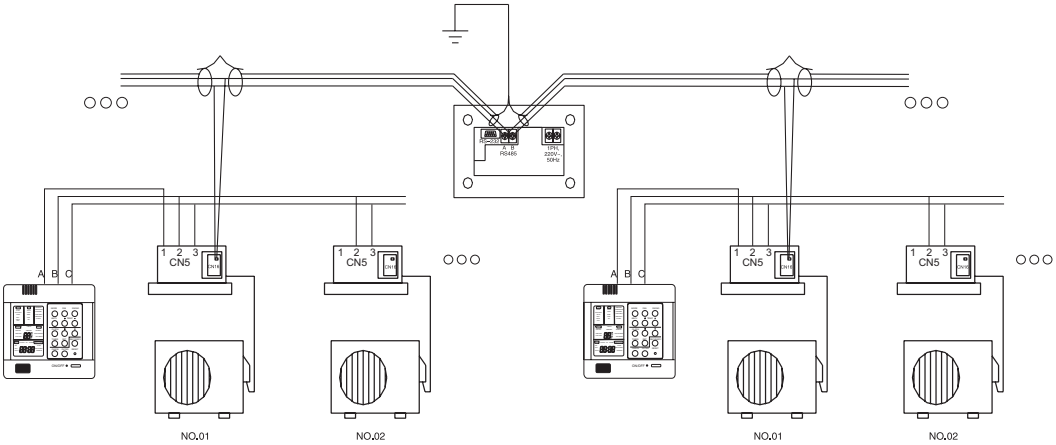

Все каталоги и инструкции здесь: http://splitoff.ru/tehn-doc.html

7. Use central controller + weekly timer to realize the group control function + weekly timing function, this type is applicable for the unitary free indoor units except for cabinet type.

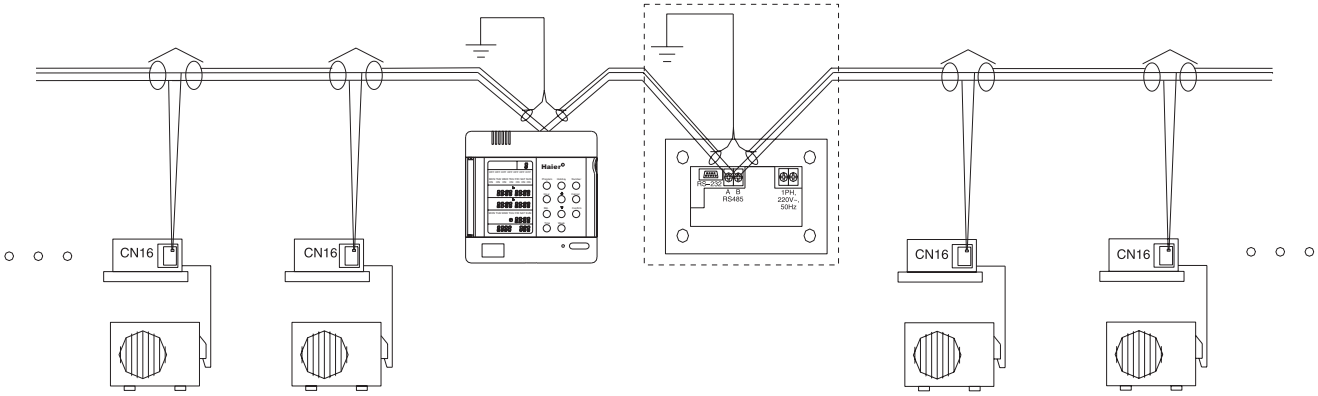

8. Realizing group control function with the central controller, for the unit which needs the detector, such as cosole unit, cabinet units.

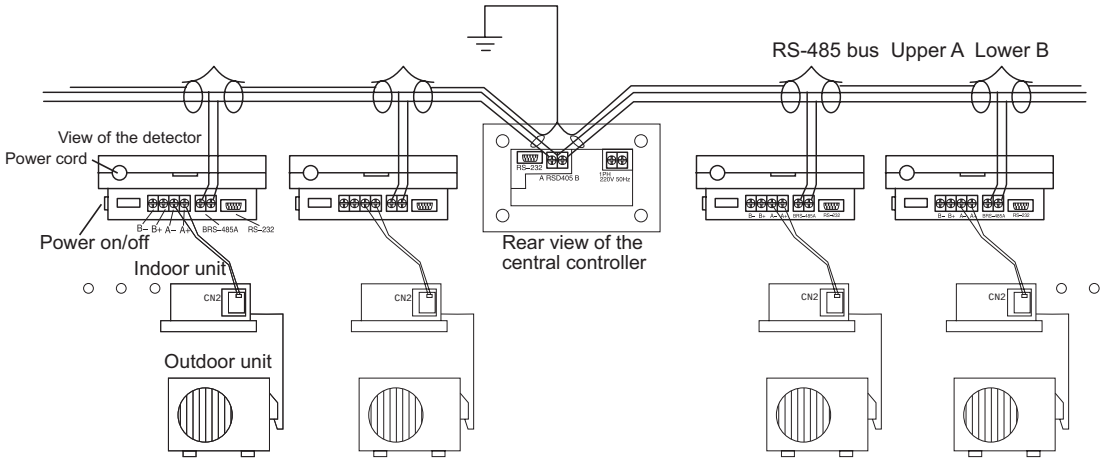

9.Realizing double unit switch-over group control function with the centralcontroller, for the unit which needs the detector, such as cosole unit, cabinet units.

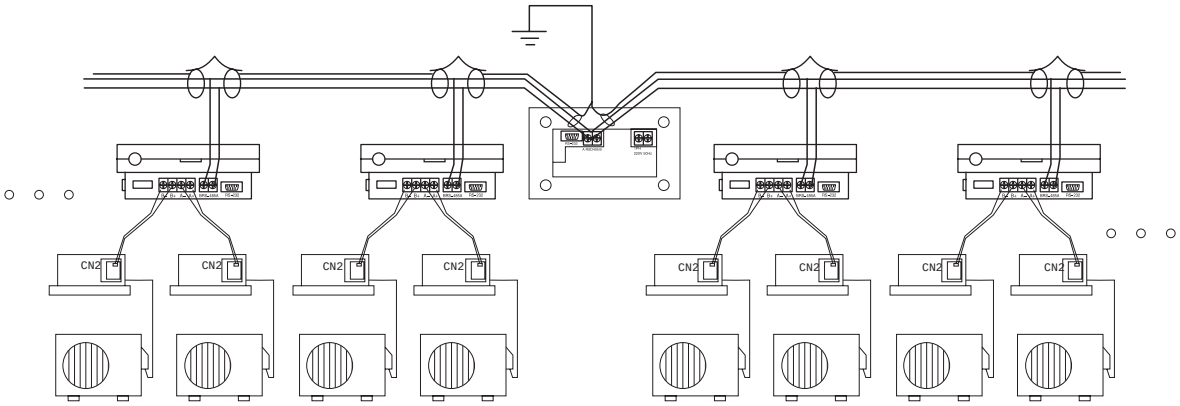

Все каталоги и инструкции здесь: http://splitoff.ru/tehn-doc.html

Installation procedure

1. Wire connecting

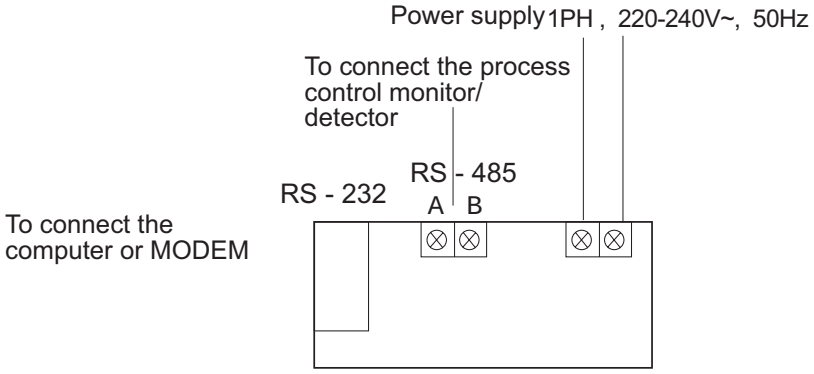

2. Installation method

A wiring box cover must be used.

The central controller shall be installed into the installation box built in the wall fastening with 4 screws (as shown).

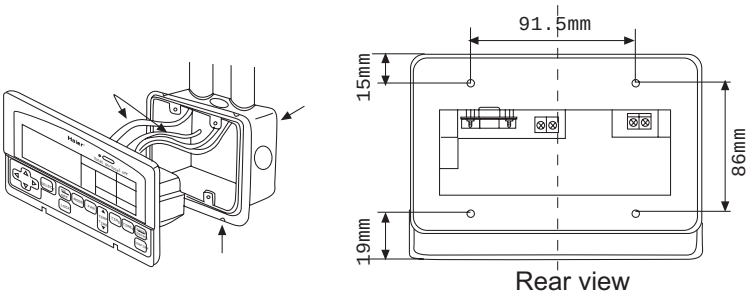

Note: Please confirm the supply voltage of AC220-240V and correct wiring. In application environment with intense electromagnetic interference, the central controller should be shielded, while the connecting wire between the monitor and the central controller should be shielded twin twisted wire.

Exterior dimension

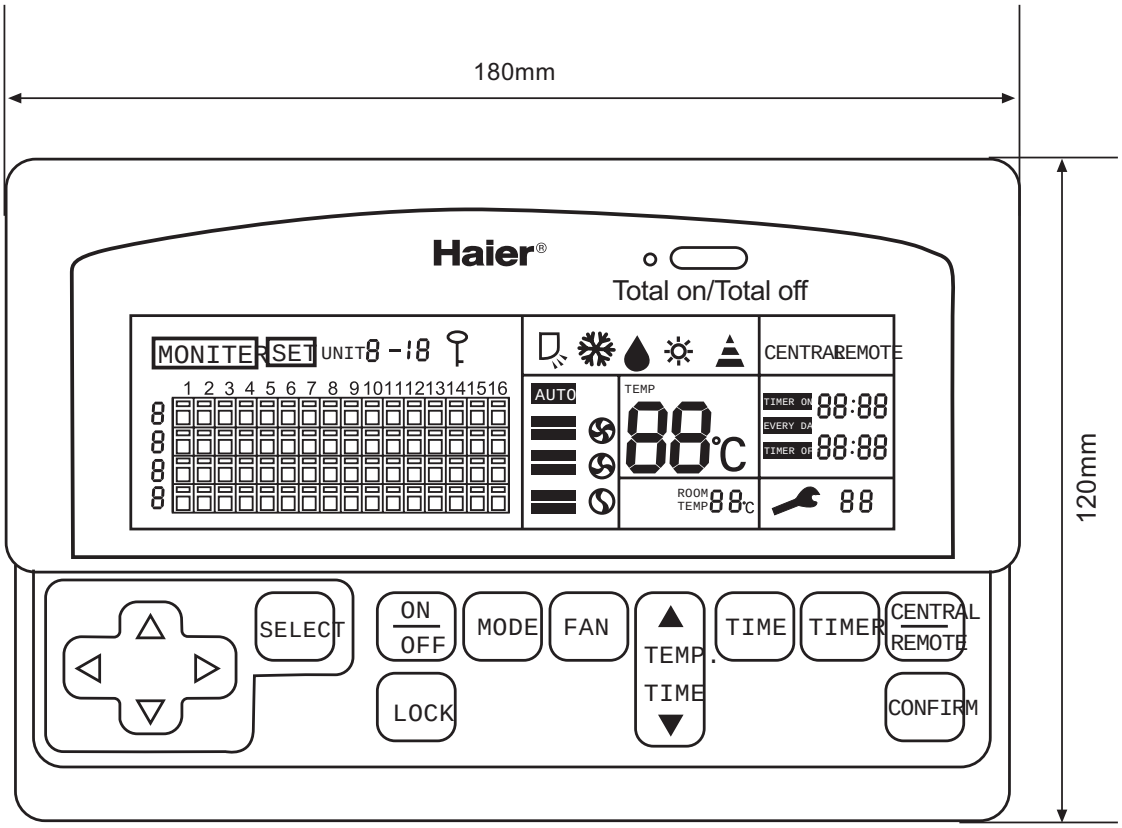

(Fig.1)

Все каталоги и инструкции здесь: http://splitoff.ru/tehn-doc.html

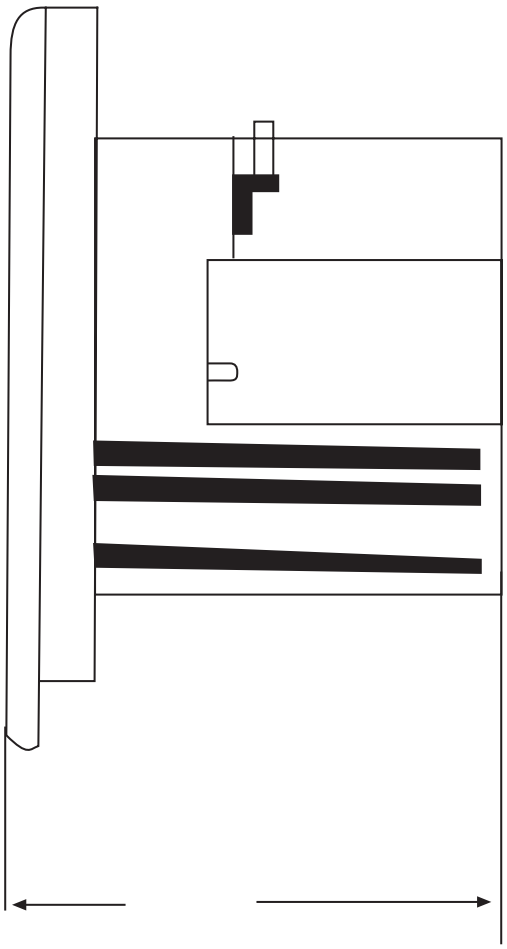

As illustrated:
(Figure 1 is the front view and Figure 2 is the side view) The central controller is 180mm long, 120mm wide and 64.4 mm thick.

(Fig.2)

Все каталоги и инструкции здесь: http://splitoff.ru/tehn-doc.html

8. Refrigerant Diagram

8.1 HPU-42CV03

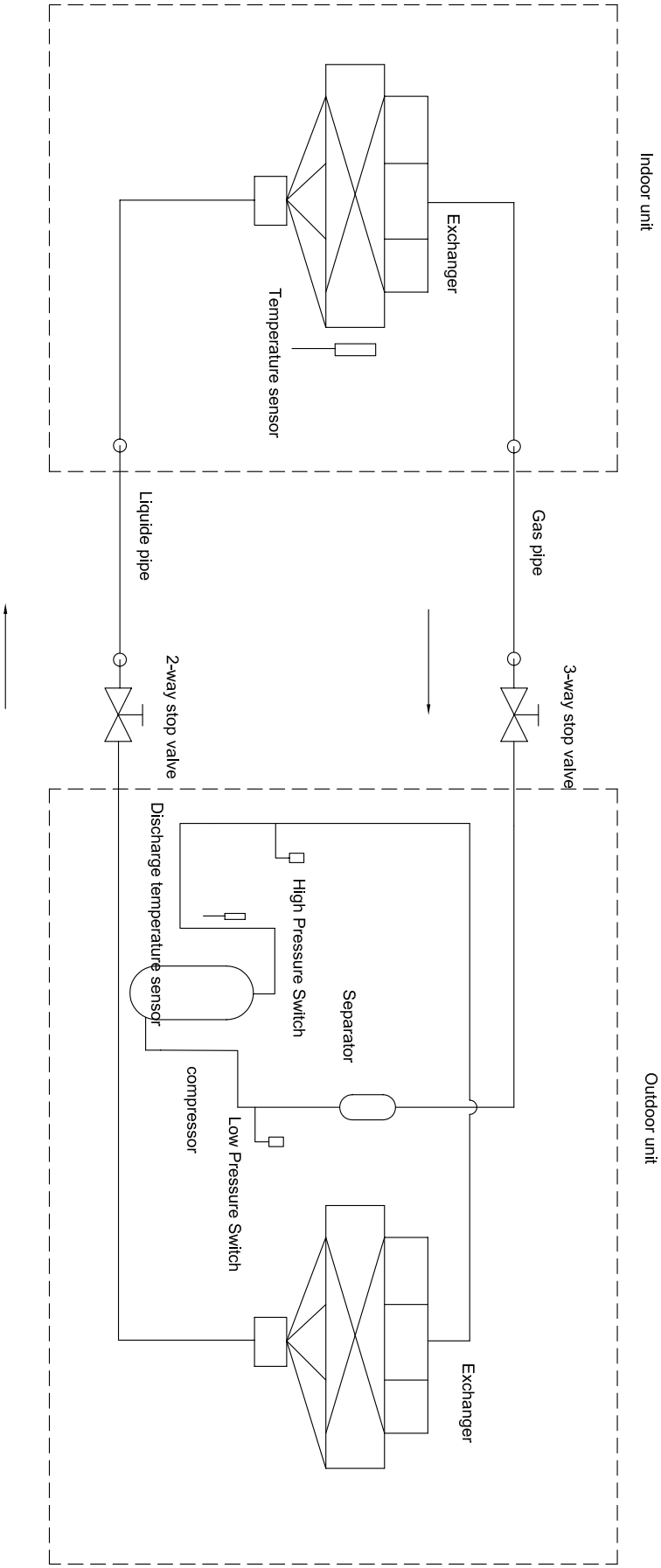

Все каталоги и инструкции здесь: http://splitoff.ru/tehn-doc.html

8.2 HPU-42HV03

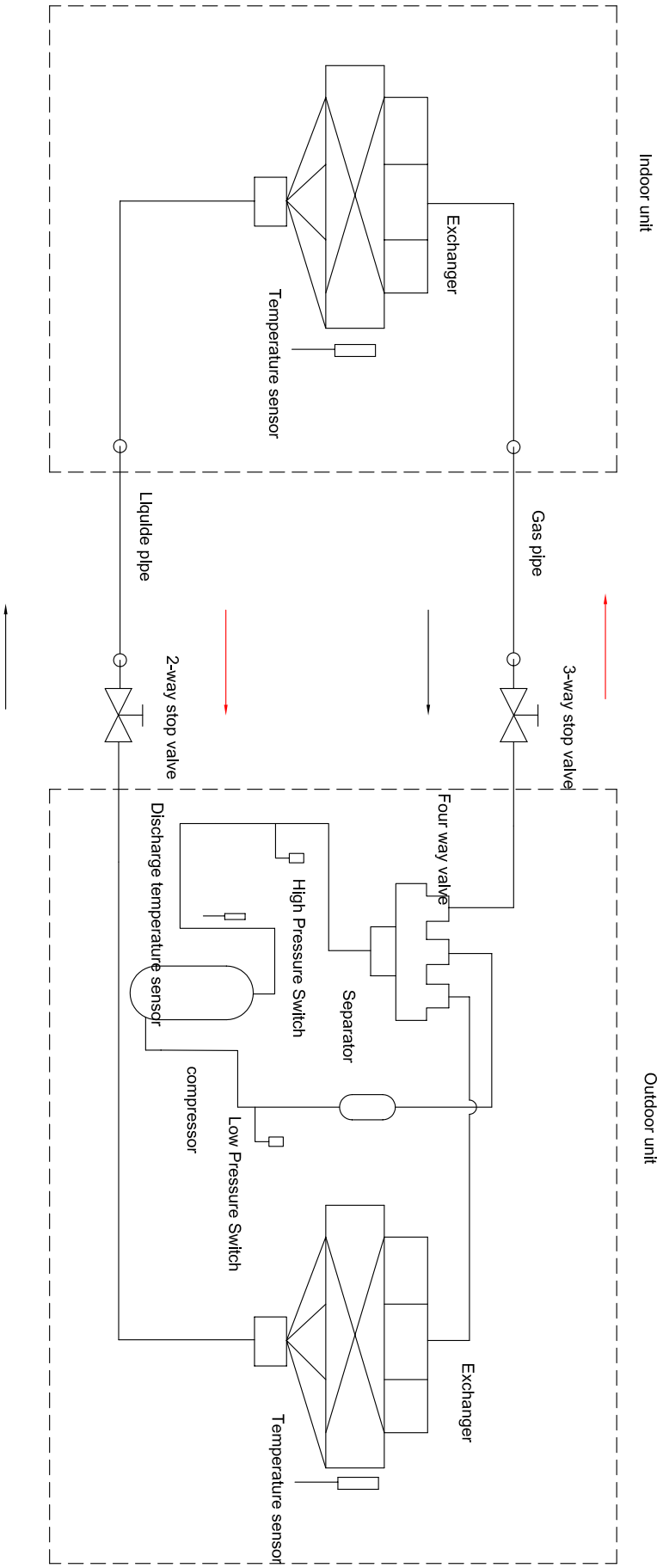

Все каталоги и инструкции здесь: http://splitoff.ru/tehn-doc.html

9. Electrical Control Functions

For indoor unit

1.Indoor AUTO FAN control

A. During cooling program.

If the unit enters AUTO FAN for the first time, when Tr＞Ts+2, select high speed; when Tr≤Ts, select low speed; or it will select med speed; If the present fan speed is AUTO HIGH, when Tr＜Ts+2, fan speed will change to AUTO MED. If the present fan speed is AUTO MED, when Tr＜Ts, fan speed will change to AUTO LOW; when Tr＞Ts+3, fan speed will change to AUTO HIGH. If the present fan speed is AUTO LOW, when Tr＞Ts+1, fan speed will chenge to AUTO MED. Fan speed conversion in AUTO FAN mode: the conversion will delay for 3 minutes from HIGH to LOW, and no delay from LOW to HIGH.

The sketch map is as follow:

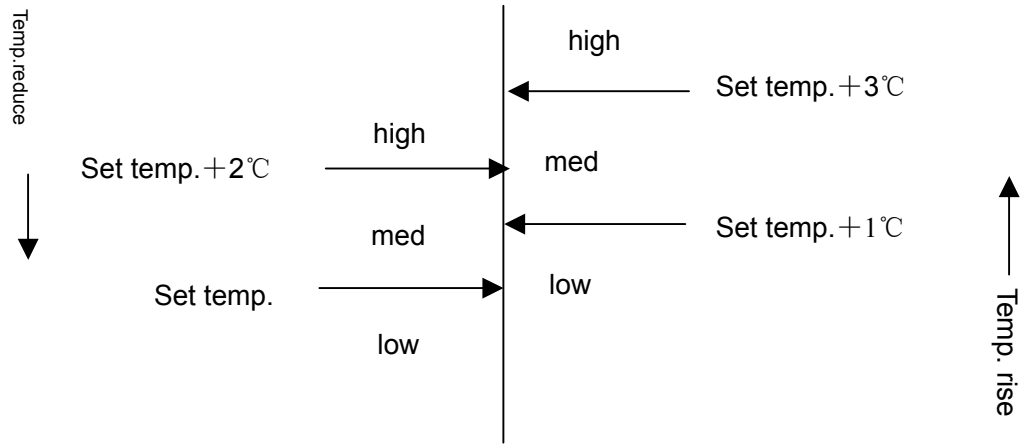

B. During heating program.

If the unit enters AUTO FAN for the first time, when Tr＞Ts-1, select low speed; when Tr≤Ts-3, select high speed; or it will select med speed; If the present fan speed is AUTO LOW, when Tr＜Ts-1, fan speed will change to AUTO MED. If the present fan speed is AUTO MED, when Tr＞Ts, fan speed will change to AUTO LOW; when Tr＜Ts-3, fan speed will change to AUTO HIGH. If the present fan speed is AUTO HIGH, when Tr>Ts-2, fan speed will chenge to AUTO MED (Ts means setting temperature on the wired controller). Fan speed conversion in AUTO FAN mode: the conversion will delay for 3 minutes from HIGH to LOW, and no delay from LOW to HIGH.

The sketch map is as follow:

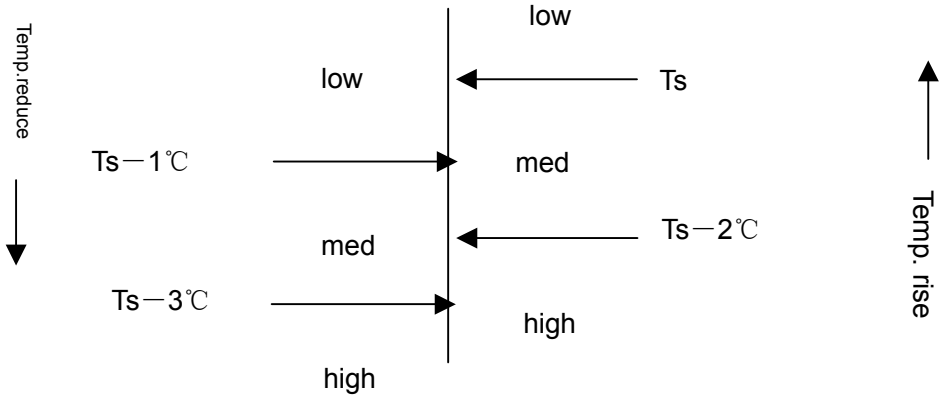

Все каталоги и инструкции здесь: http://splitoff.ru/tehn-doc.html

2. Automatic run

1). Cooling-heating type

After the machine being started and running mode changes to AUTO, the system will decide running mode according to difference between the present room temperature and setting temperature, then runs as the decided mode. In the following selections, Tr means room temperature and Ts means setting temperature.

Select running mode according to the following conditions at the first time to enter Auto mode:

Tr≥Ts-3℃ to select cooling mode (with setting temperature being Ts +3)

Tr＜Ts-3℃ to select heating mode (with setting temperature being Ts)

After the system entering auto run mode, the running mode can convert automatically according to variation of room temperature between cooling and heating. If the unit is in cooling mode, when the temperature arrives stop value, the compressor stops; the system will measure the temperature after compressor stops for 3 minutes. At this time, if Tr＜Ts-3℃, the unit will enter heating mode, or it will still be cooling mode. If the unit is in heating mode, when the temperature arrives stop value, the compressor stops; the system will measure the temperature after compressor stops for 3 minutes. At this time, if Tr＜Ts+3℃, the unit will enter cooling mode, or it will still be heating mode.

If the unit is in heating mode, when indoor heat exchanger temperature is over 63℃, the unit will turn into cooling mode automatically, in 1 hour, the indoor heat exchanger temperature will not be limited, and heating operation will stop temporarily, 1 hour later, the system will adjust the working mode due to the above conditions.

If the unit is in heating mode for the first time, compressor motor will start up, within 8 minutes the

system will not measure indoor ambient temperature, the remote controller will be off.

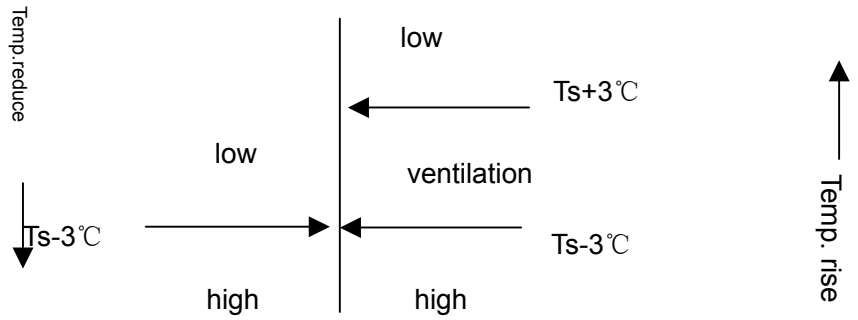

2). Single Cooling type

Select running mode according to the following conditions at the first time to enter Auto mode:

Tr≥Ts+3℃ to select cooling mode

Tr＜Ts-3℃ to select blowing mode

After entering Auto mode, the operation mode can be changed between cooling mode and fan mode according to indoor ambient temperature: if the unit now is in cooling mode, when Tr＜Ts-3, the mode will be changed to Fan; if the unit is in Fan mode, when

Все каталоги и инструкции здесь: http://splitoff.ru/tehn-doc.html

Tr≥Ts+3, the mode will be changed to cooling mode.

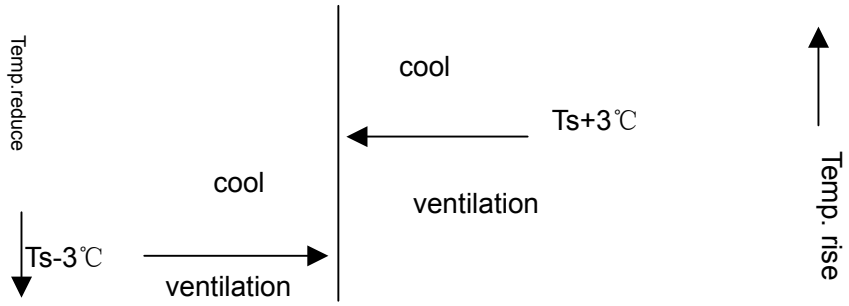

3. COOL mode control

4-way valve being powered off, compressor run/stop will depends on the temperature difference between the room temperature and the set temperature.

Tr≥Ts+1 compressor will run;

Tr≤Ts-1 compressor will stop;

Ts-1<Tr<Ts+1 compressor will stay in original state

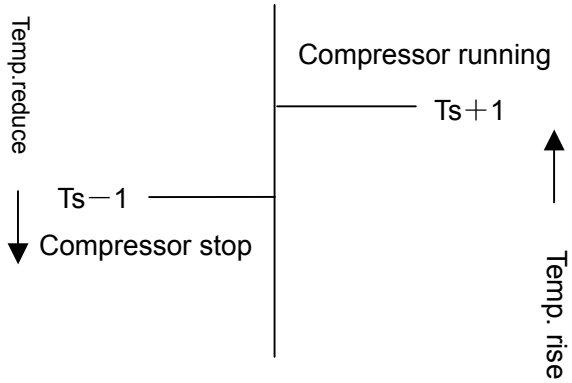

Anti-freezed protection

When the unit has run for over 6 minutes after compressor starts up, if indoor coil temperature Tg<1℃ last 1 minute, the compressor and the outdoor motor will stop; 9 minutes later after compressor stops and when indoor coil temperature rises to 10℃, the compressor and the outdoor motor will run again.

Current peak value protection

Controlled by outdoor unit.

4. DRY mode control (in the following selections, Tr means room temperature and Ts means setting temperature.)

When the uint enters DRY mode for the first time, the compressor, outdoor motor and indoor motor will perform according to the below conditions:

Tr> Ts＋２℃ the compressor and the outdoor motor will run continuously, indoor motor will run at the set speed, this area is defined as Area A;

Ts≤Tr≤Ts＋２℃, the compressor and the outdoor motor will always run for 10 minutes and then stop for 6 minutes, indoor motor will be LOW speed, this area is defined as Area B;

Tr < Ts, the compressor and the outdoor motor will stop, indoor motor will run at Low speed, this area is defined as Area C.

After the unit is running in DRY mode, the system will change over among Area A, Area B, and Area C. If the system is in Area A, when Tr＜Ts+2, change to Area B; If the

Все каталоги и инструкции здесь: http://splitoff.ru/tehn-doc.html

system is in Area C, when Tr > Ts, change to Area B; If the system is in Area B, when Tr> Ts＋３, change to Area A; When Tr＜Ts－１, change to Area C.

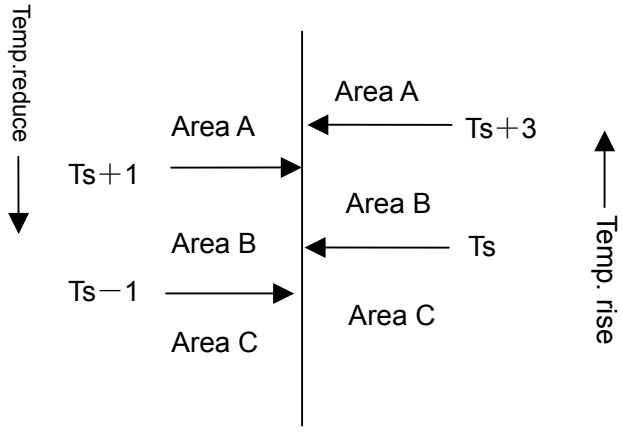

Anti-freezed protection: When the unit has run for over 6 minutes after compressor starts up, if indoor coil temperature Tg<1℃ last 1 minute, the compressor and the outdoor motor will stop; 9 minutes later after compressor stops and when indoor coil temperature rises to 10℃, the compressor and the outdoor motor will run again.

5. Fan mode control

Compressor and outdoor motor stop working, indoor motor can set High, Med and Low speed, the fan blade can swing or be fixed on a position. In this mode, you can set TIMER function, but there is no SLEEP function. Also, you can set high voltage dirt collecting or fresh air function.

6. HEAT mode control (in the following selections, Tr means room temperature and Ts means setting temperature.)

4-way valve control: When entering heating mode for the first time, compressor starts up, 4-way valve will be on 3 minutes later; in heating mode, 4-way valve will not be off. If the unit changes from heating to other modes, 4-way valve will be off immediately.

compressor control: the compressor and outdoor fan motor will depends on the temperature difference between the room temperature and the set temperature.

Tr≥Ts + 1 compressor stops
Tr≤Ts- 1 compressor running
Ts-1<Tr<Ts + 1 compressor retains original state

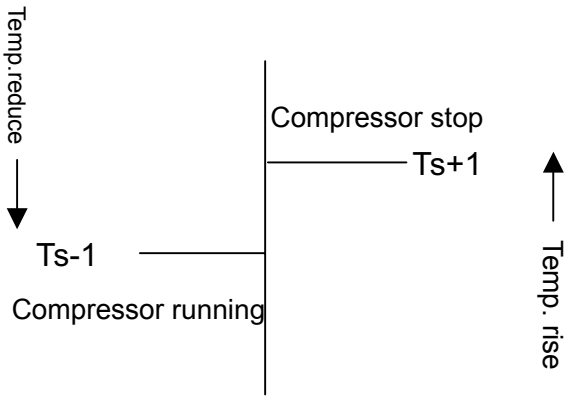

Outdoor motor and the compressor runs or stops simultaneously (except for overheat protection), indoor fan speed can be set at High, Med, Low or Auto speed, and

Все каталоги и инструкции здесь: http://splitoff.ru/tehn-doc.html

the fan blade can swing or be fixed on one position. You can set TIMER or SLEEP mode.

Overheat protection

In heating mode, compressor has started up and indoor motor has run for over 30 seconds, if indoor coil temperature Tg>56℃, outdoor motor will chenge to LOW; if Tg<52 ℃, and outdoor motor has stop for 45s, outdoor motor will run again; if indoor coil temperature Tg>60℃, outdoor motor will stop; if Tg<56℃, and outdoor motor has stop for 45s, outdoor motor will run again; if Tg>68℃, the compressor will stop and indoor motor will run according to the thermostat OFF state. After the compressor stops for 9 minutes and Tg reduces to 48℃, the unit will resume to heating mode, and the compressor and the outdoor motor will run again.

Anti-cold air function in heating mode

When the uint enters heating mode for the first time, or last defrosting is over, if Tg＜28℃, indoor motor will stop; if 38℃>Tg≥28℃, indoor motor will run at low speed; if Tg≥38℃ or the compressor has run for over 4 minutes, indoor motor will run at the set speed.

Blowing remaining heat function

In heating mode, the thermostat is OFF, the compressor stops, indoor motor will run at low speed at least 50 seconds.

Auxiliary electric heating function

Enter condition:

1) Tr≤Ts-2℃
2) compressor ON and running for 1 minute
3) Tr≤23℃
4) Indoor motor running
5) Electric heating function start signal available (cancelled)

If the above conditions can all be met, the electric heating function will work.

If one of the below conditions can be met, the electric heater will stop:

1) Tr≥Ts-1℃
2) compressor OFF or indoor motor stops
3) Tr≥25℃
4) Electric heating function start signal not available (cancelled)

Manual defrost:

In heating mode, the set temperature 30℃ and in high speed, in 5 seconds, press SLEEP button 6 times continuously, then the buzzer will sound 3 times, you can enter the manual defrosting.

For the unit with auxiliary electric heating function, If the auxiliary electric heating function is working when the defrosting condition is met, please stop electric heater firstly, 3 seconds later, defrosting can begin.

7. SLEEP function

Sleep function can be setted in COOLING, DRY and HEATING mode. in cooling or dry mode, after running at SLEEP mode for 1 hour, the set temperature will rise 1℃, another 1 hour later, the set temperature will rise another 1℃; the unit continues running for 6 hours, then the unit will stop.

Все каталоги и инструкции здесь: http://splitoff.ru/tehn-doc.html

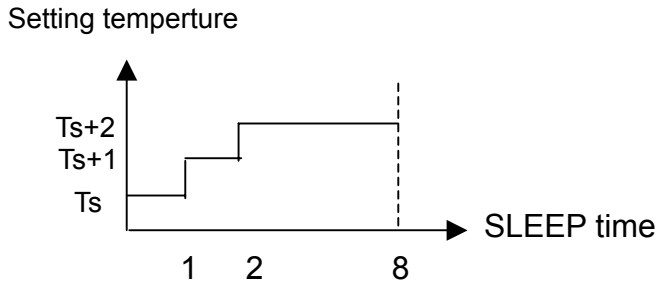

In heating mode, after running at SLEEP mode for 1 hour, the set temperature reduces 2℃, another 1 hour later, the set temperature will reduce 2℃, and another 3 hours later, the set temperature rises 1℃; the unit continues running for 3 hours, then the unit will stop.

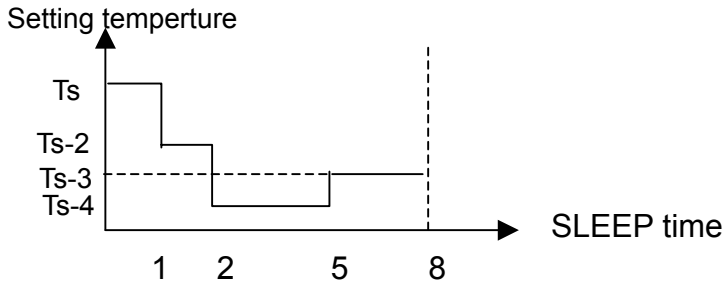

8. Compulsory cooling operation

After the panel receives the compulsory cooling signal, the unit enters the compulsory cooling state. and indoor/outdoor motors are in high speed; in the 5 minutes, the system will not adjust the protection and not be limited by the ambient temperature, but the compressor will be limited by 3-minute protection. 5 minutes later, the unit will enter the normal cooling state.

9. System protection

9.1 3-minute protection for compressor startup

After the compressor stops, at least 3 minutes later, the compressor can restart up; if the unit is powered off in running less than 3 minutes, after being electrified, 3 minutes later, the compressor can restart up. Being electrifed for the first time, there is no 3-minute delay protection.

9.2 Sensor failure protection

9.3 Communication failure protection

10. Panel selection

Select the panel according to the 2 dip switch

Style of panel	1	2
Cabinet V panel	OFF	ON
Cabinet Z panel	ON	OFF
Wired controller	ON	ON

Все каталоги и инструкции здесь: http://splitoff.ru/tehn-doc.html

10. Diagnostic information (troubleshooting)

10.1 Failure code

10.1.1 For outdoor units

Failure description	Fault code
Outdoor ambient temp. sensor failure	E3 / flash 3 times
Outdoor coil temp. sensor failure	E4/ flash 4 times
Fault in discharging temp. sensor	E4/ flash 4 times
Phase failure	E5/ flash 5 times
Compressor current protection	E5/ flash 5 times
High pressure abnormal	E6/ flash 6 times
Low pressure malfunction	E6/ flash 6 times
Communication failure	E9/ flash 9 times

10.1.2 For indoor unit

No.	Fault description	Operation panel display
1	Indoor ambient temp. sensor failure	E1
2	Indoor coil temp. sensor failure	E2
3	Outdoor ambient temp. sensor failure	E3
4	Outdoor coil temp. sensor failure	E4
5	CT current failure	E5
6	Pressure protection	E6
7	Communication failure between indoor units panel	E8
8	Communication failure between indoor and outdoor PCB	E9

Все каталоги и инструкции здесь: http://splitoff.ru/tehn-doc.html

10.2 Troubleshooting

1) Troubleshooting (before replacement of PCB)

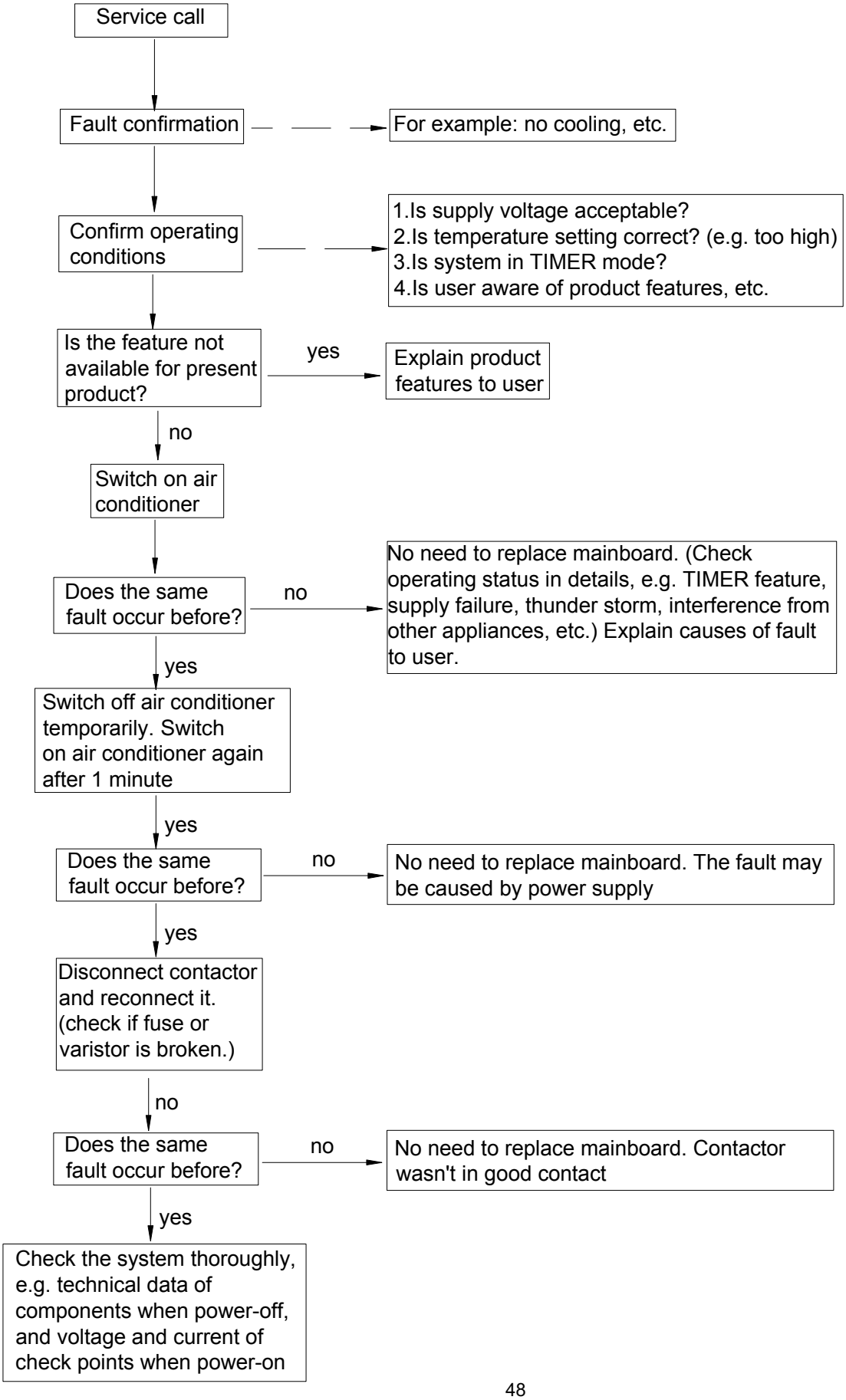

Все каталоги и инструкции здесь: http://splitoff.ru/tehn-doc.html

2) Sensor failure

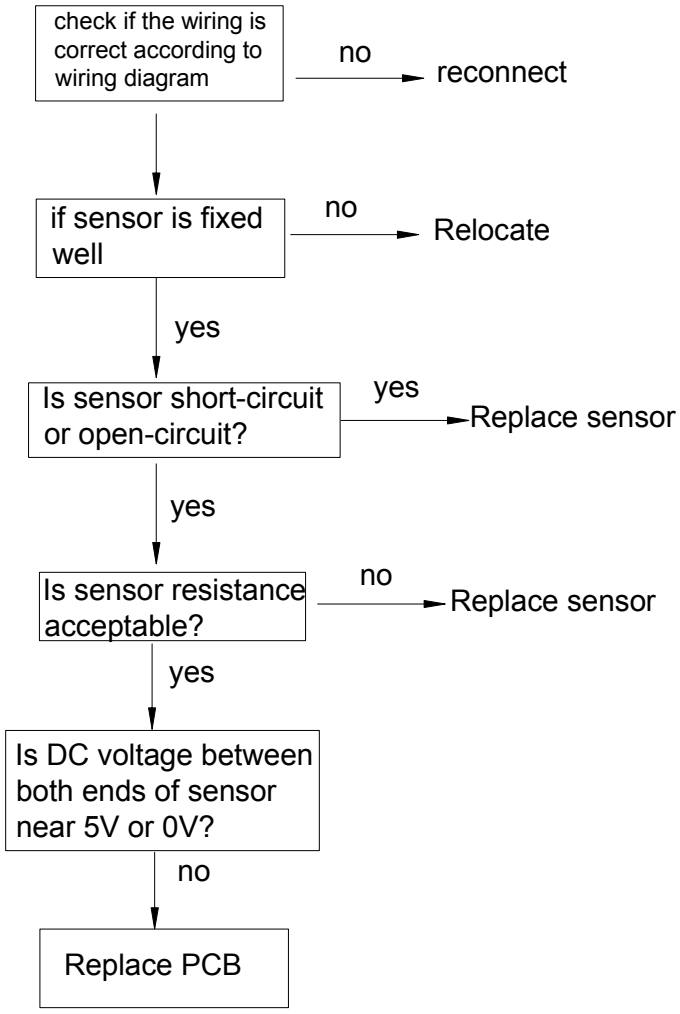

3) EEPROM failure

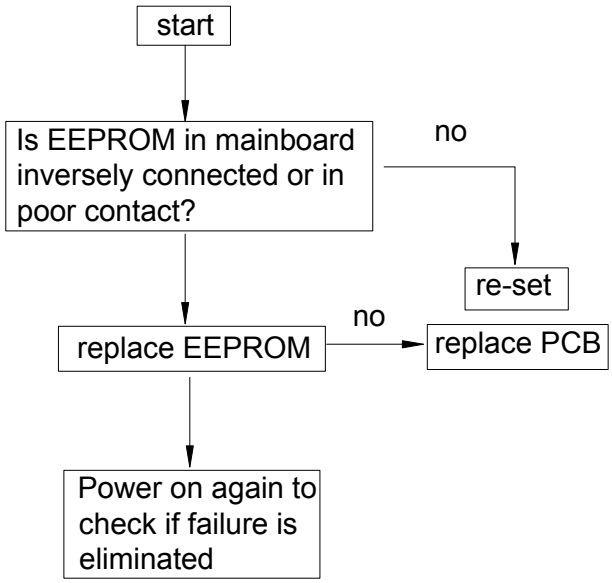

Все каталоги и инструкции здесь: http://splitoff.ru/tehn-doc.html

4) Communication error between indoor and outdoor units

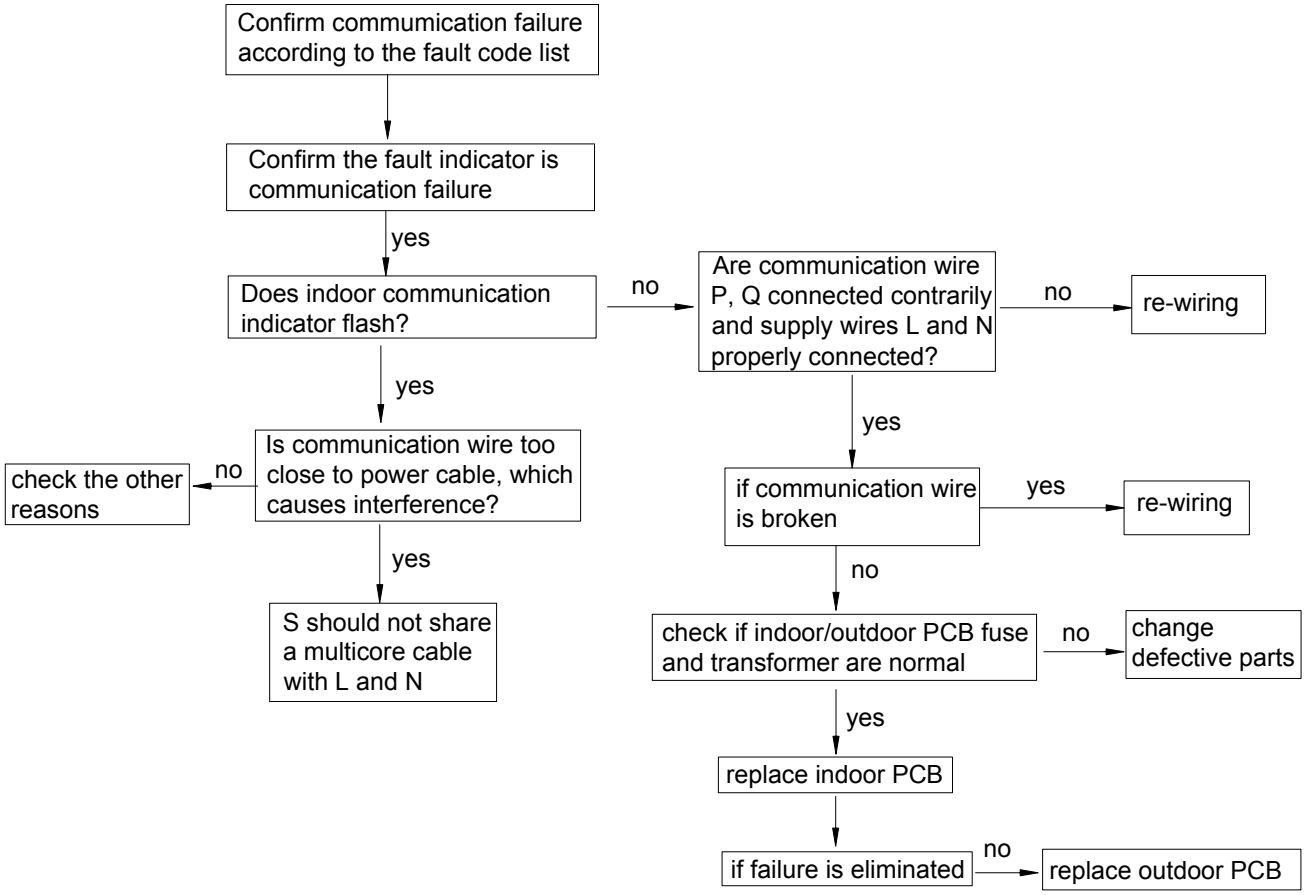

5) Phase loss or phase failure

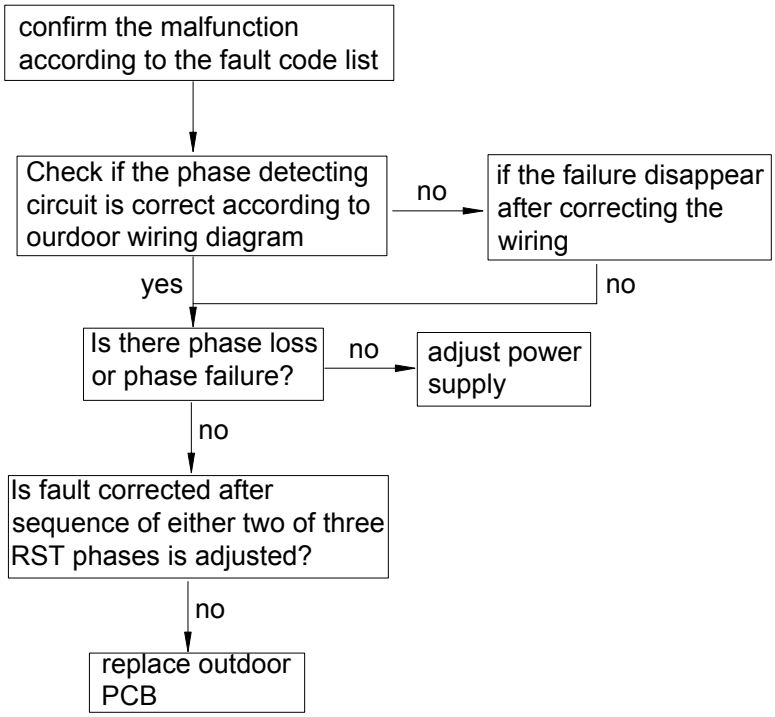

Все каталоги и инструкции здесь: http://splitoff.ru/tehn-doc.html

6) Temperature cutoff protection

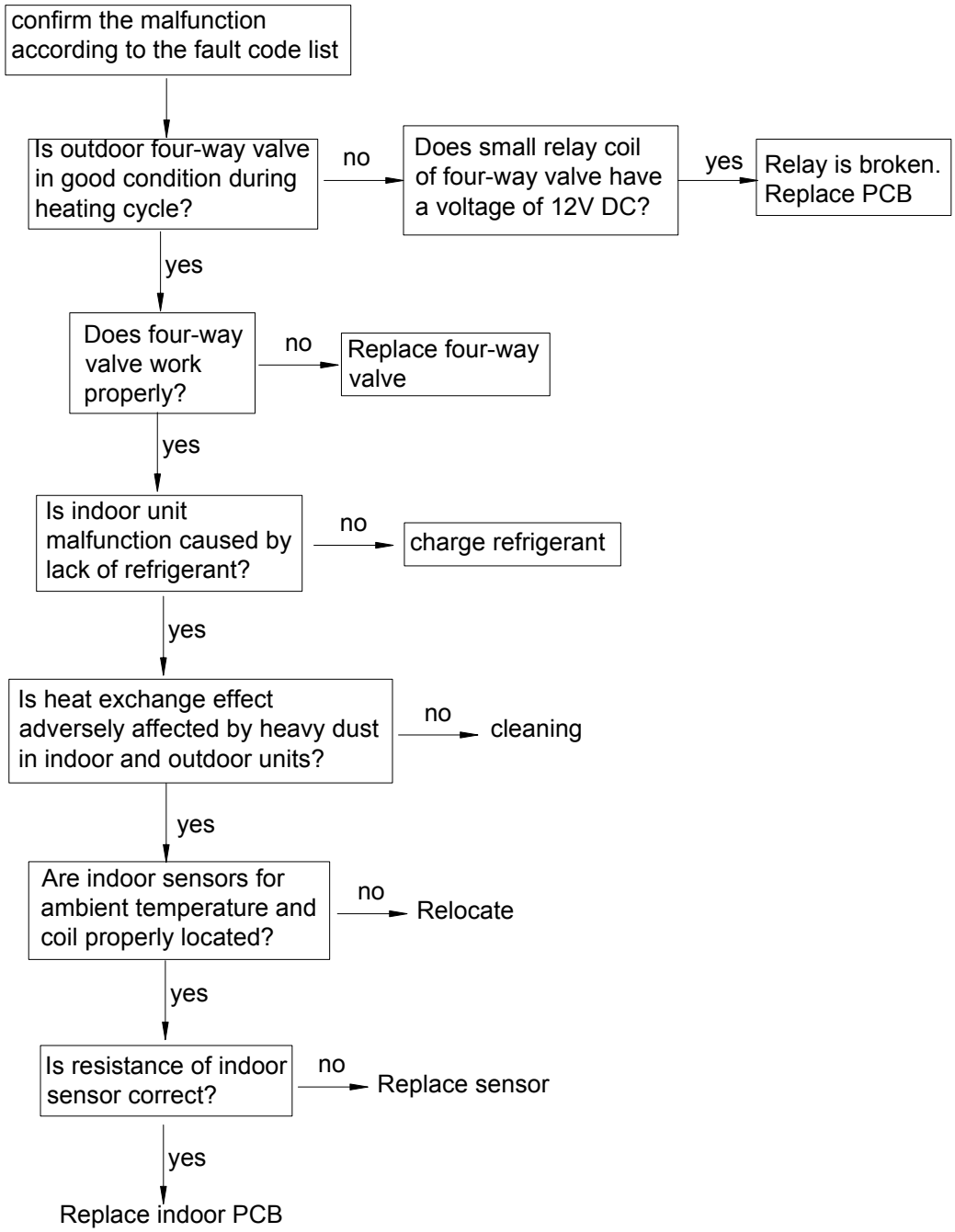

Все каталоги и инструкции здесь: http://splitoff.ru/tehn-doc.html

7) Pressure protection

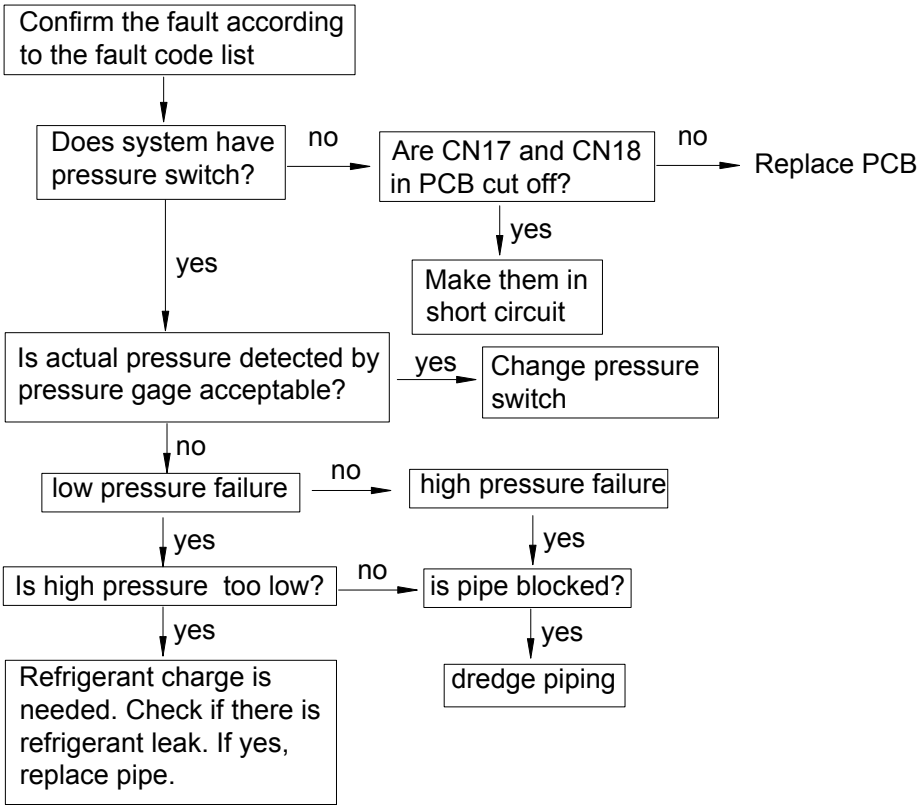

8)Compressor discharging overheat protection

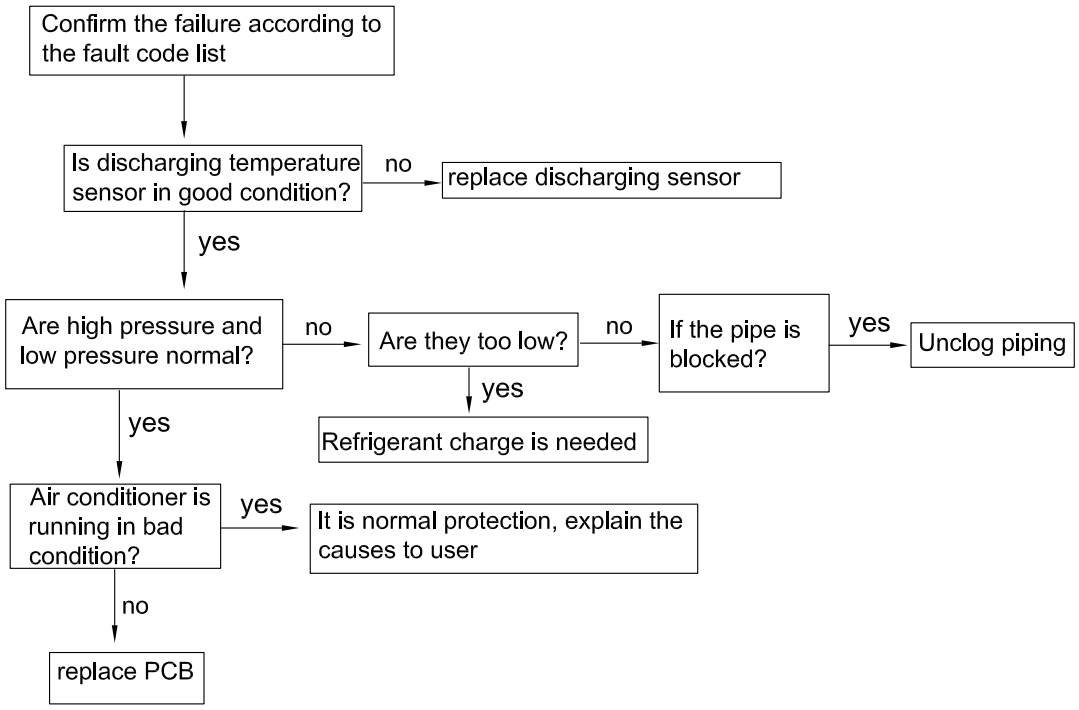

Все каталоги и инструкции здесь: http://splitoff.ru/tehn-doc.html

11. Electric data

11.1 Wiring diagram

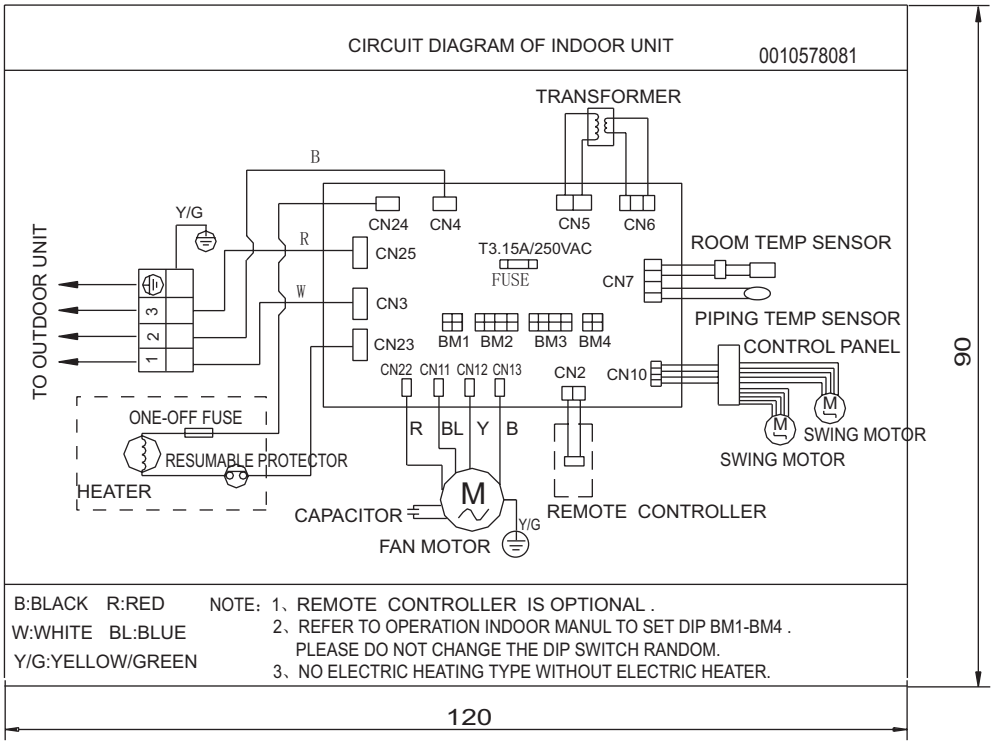

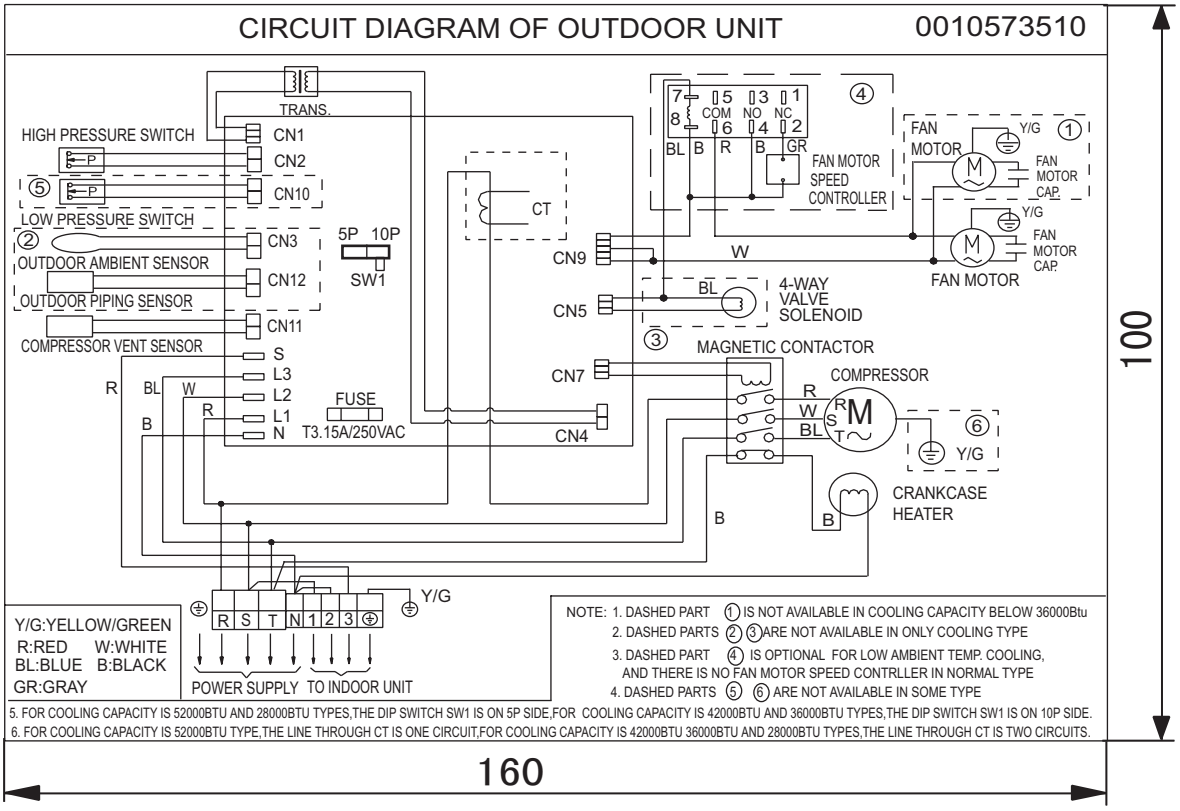

Все каталоги и инструкции здесь: http://splitoff.ru/tehn-doc.html

11.2 Circuit diagram

For indoor unit

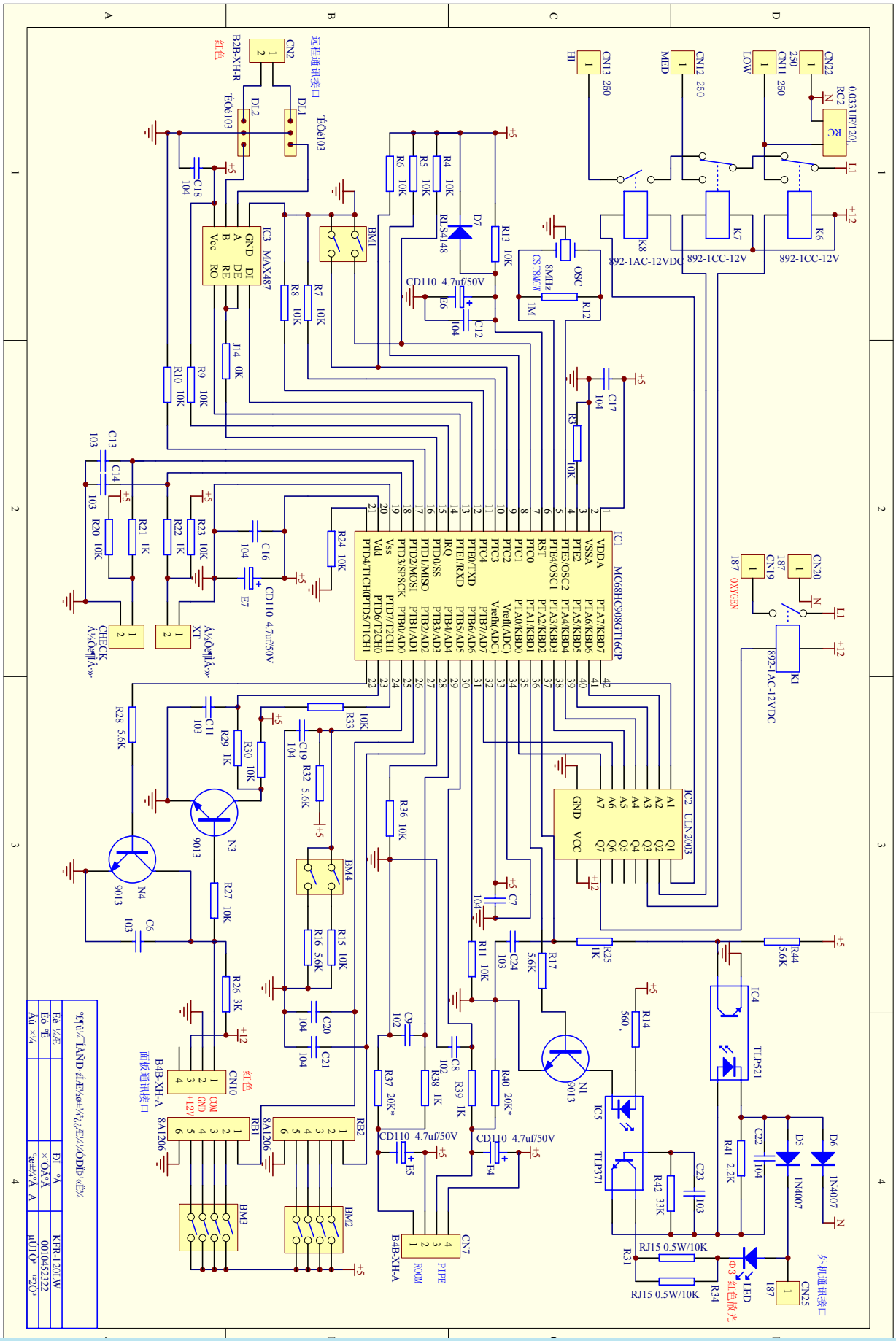

Все каталоги и инструкции здесь: http://splitoff.ru/tehn-doc.html

Haier

Commercial Air Conditioner

Model: HPU-42CV03
HPU-42HV03

For outdoor unit of HPU-42CV03

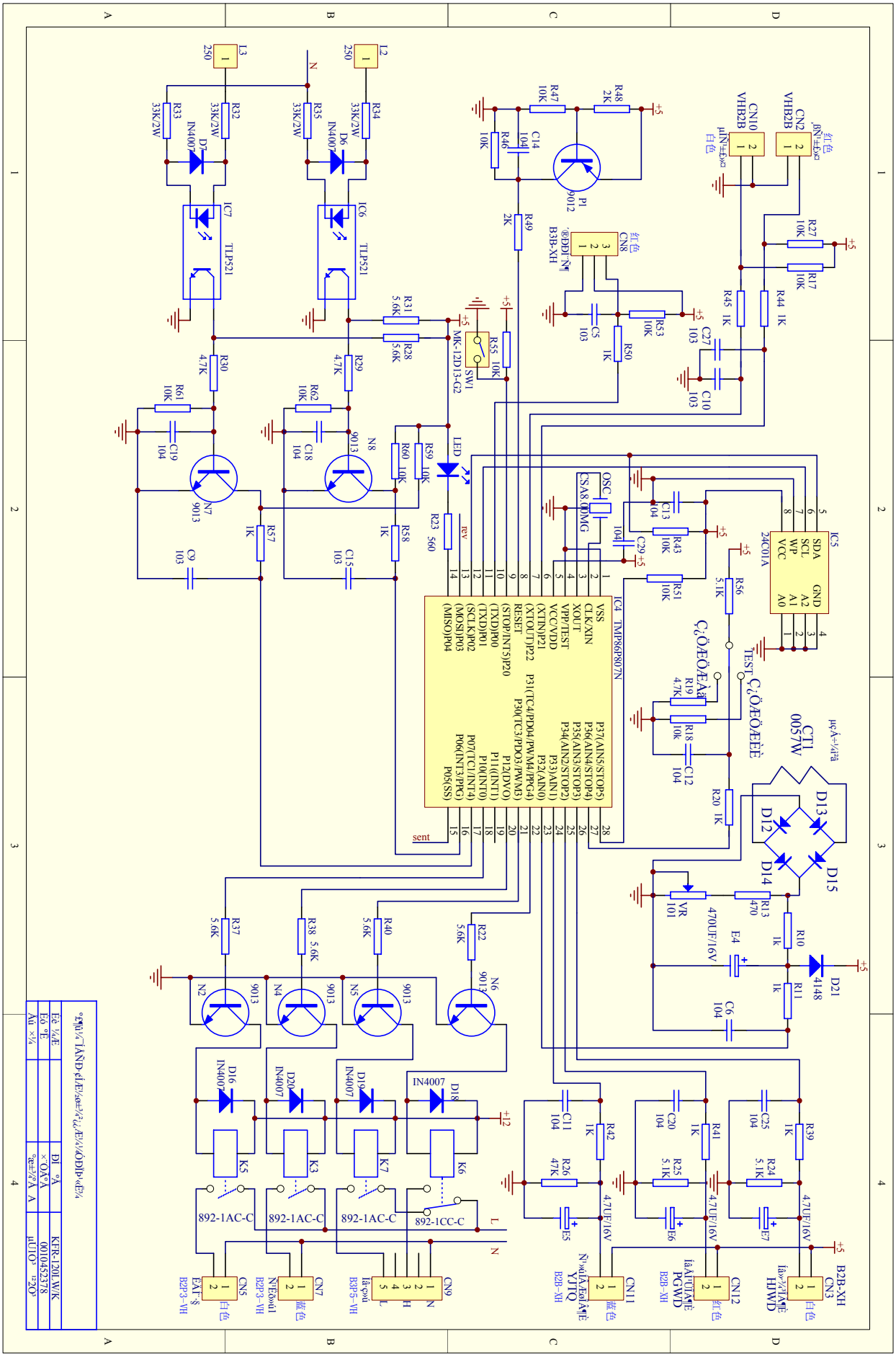

Все каталоги и инструкции здесь: http://splitoff.ru/tehn-doc.html

Все каталоги и инструкции здесь: http://splitoff.ru/techn-doc.html

For outdoor unit of HPU-42HV03

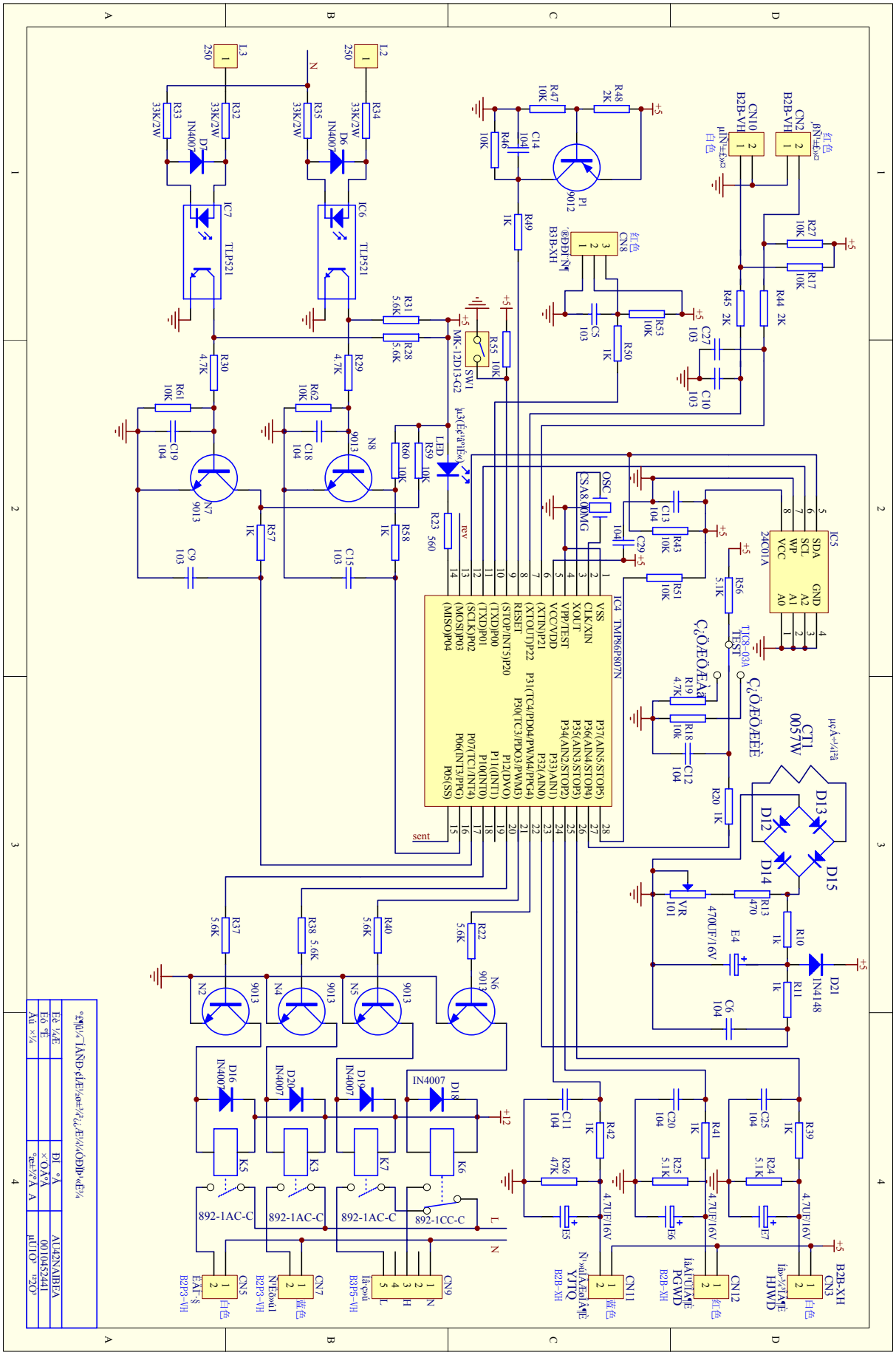

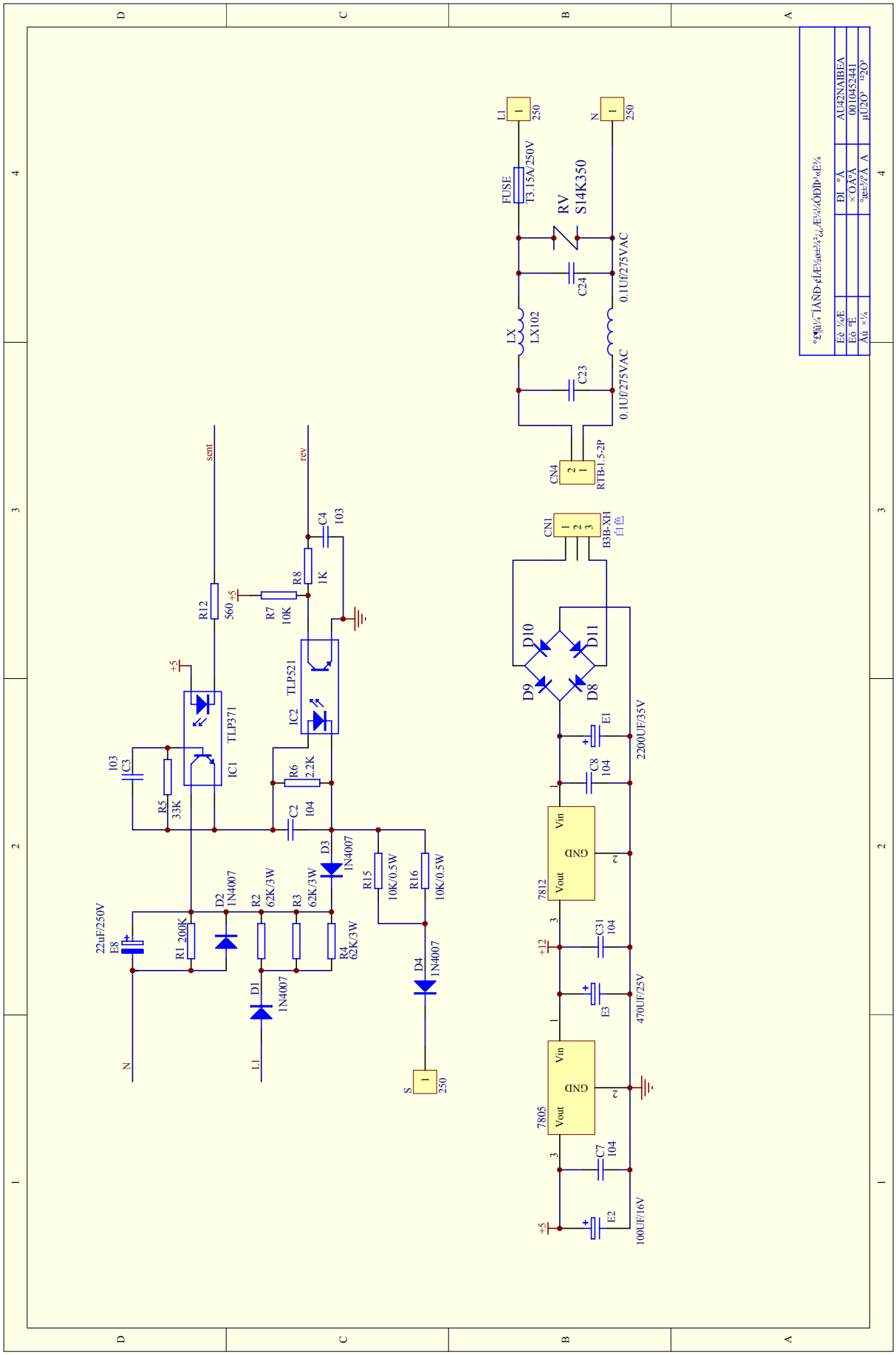

Все каталоги и инструкции здесь: http://splitoff.ru/tehn-doc.html

11.3 Printed diagram

For indoor unit

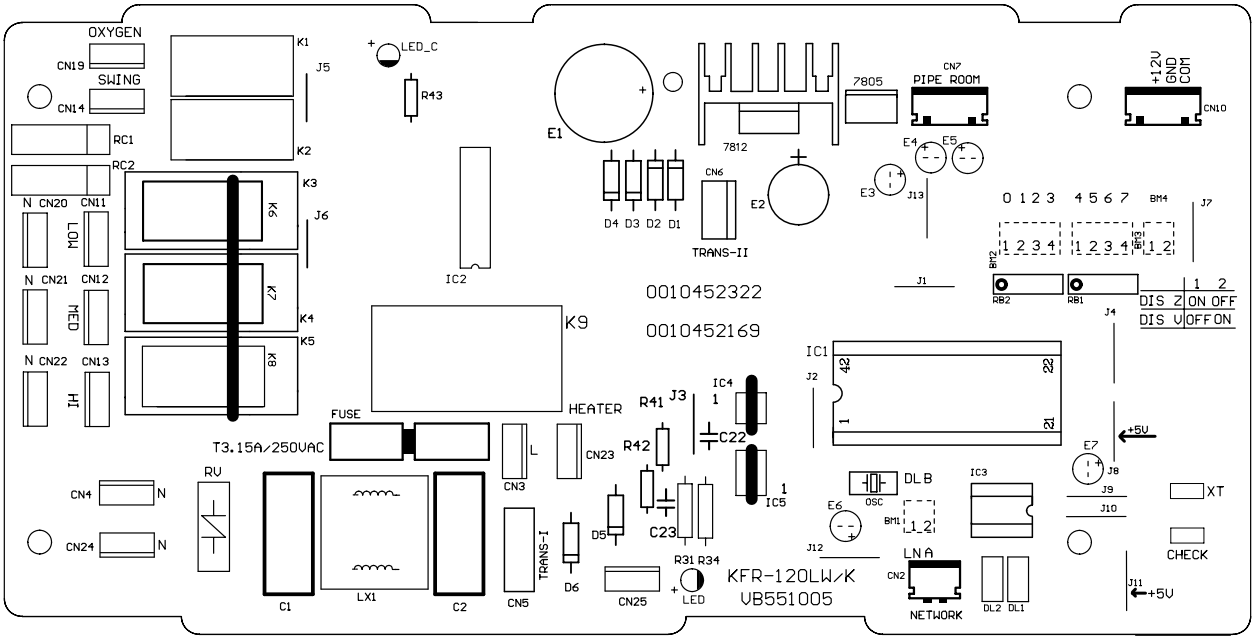

No.	Port	Function
1	Fuse	T3.15A 250VAC
2	CN2	Central controller B2B-XH-R
3	CN3	Live wire (L)-250
4	CN4	Neutral wire (N)-250
5	CN5	Primary side of transformer RTB-1.5-2P
6	CN6	Second side of transformer B3B-XH-A
7	CN7	Sensor B4B-XH-A
8	CN10	Operation panel B4B-XH-A
9	CN11	Low speed of fan motor -250
10	CN12	Middle speed of fan motor -250
11	CN13	High speed of fan motor -250
12	CN19	Negative ion generator (L)-187
13	CN20	Negative ion generator (N)-187
14	CN22	Neutral wireof fan motor-250
15	CN23	Electrical heater (L)-250
16	CN24	Electrical heater (N)-250
17	CN25	Communication between indoor and outdoor units -187

Все каталоги и инструкции здесь: http://splitoff.ru/tehn-doc.html

For outdoor unit of HPU-42CV03

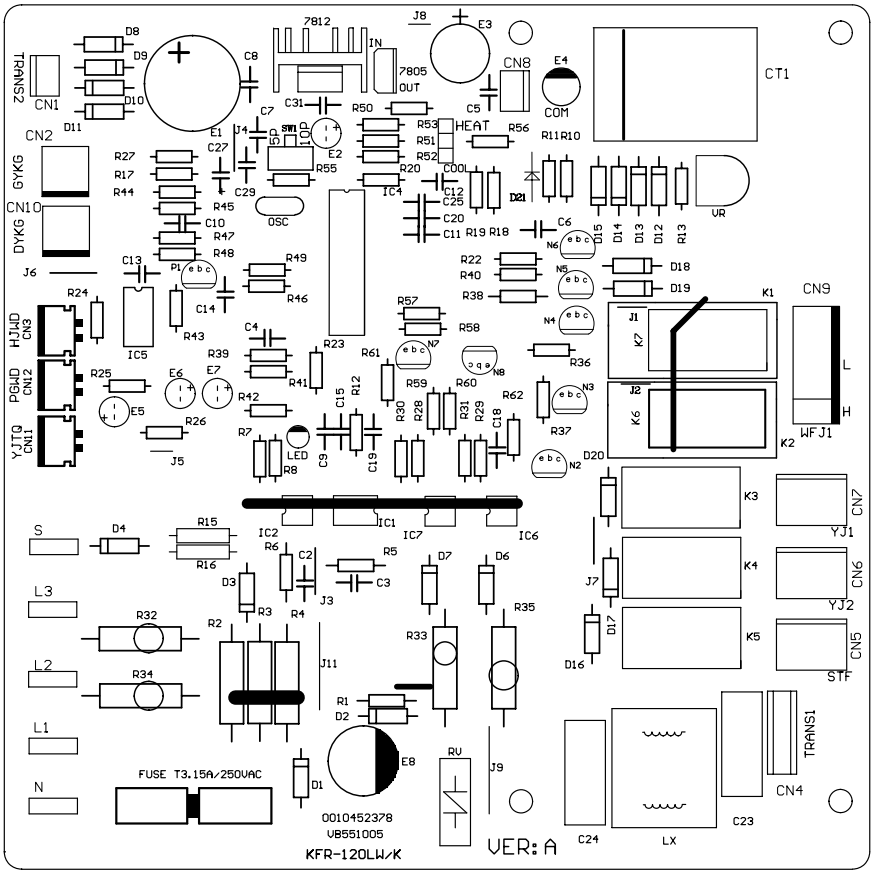

No.	Port	Function
1	L1	3-phase L1-250
2	L2	3-phase L1-250
3	L3	3-phase L1-250
4	N	Neutral wire of three phase N-250
5	S	Communication between indoor and outdoor units -250
6	CN1	Second side of transformer B3B-XH
7	CN2	High pressure switch B2B-VH
8	CN4	Primary side of transformer RTB-1.5-2P
9	CN7	Control port for AC contactor B2P3-VH
10	CN8	Connection port of outdoor device B3B-XH
11	CN9	Outdoor fan motor B3P5-VH
12	CN10	Low pressure switch B2B-VH
13	CN11	Discharging sensor B2B-XH
14	Fuse	T3.15A/250VAC
15	SW1	Dip switch

Все каталоги и инструкции здесь: http://splitoff.ru/tehn-doc.html

For outdoor unit of HPU-42HV03

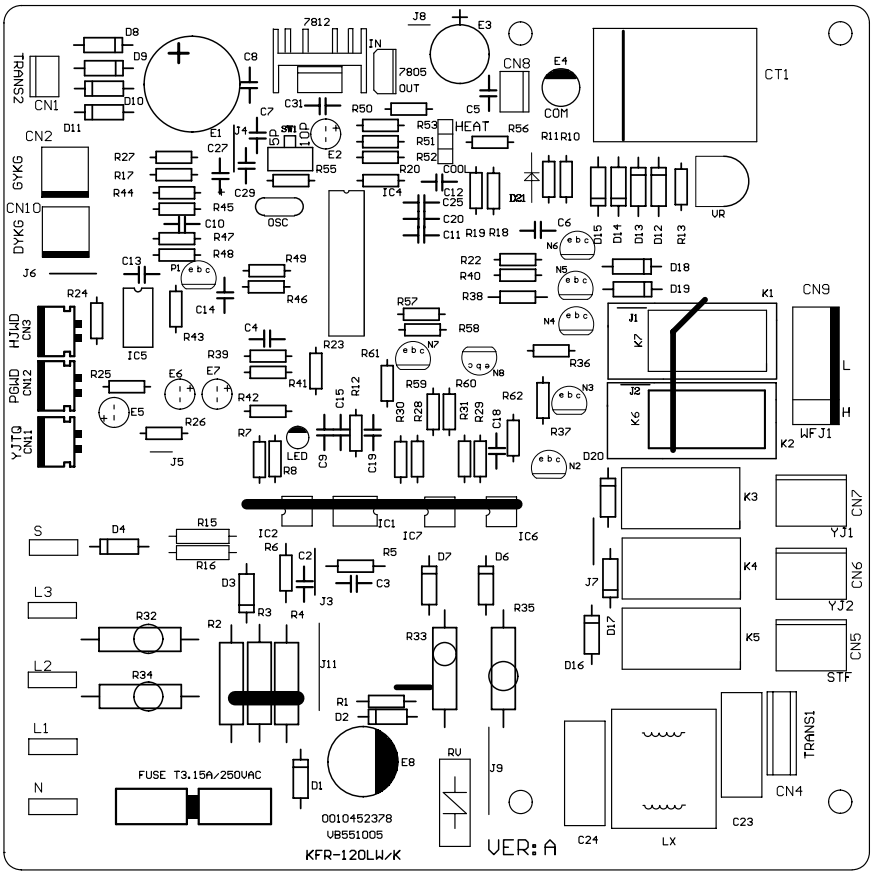

No.	Port	Function
1	L1	3-phase L1-250
2	L2	3-phase L1-250
3	L3	3-phase L1-250
4	N	Neutral wire of three phase N-250
5	S	Communication between indoor and outdoor units -250
6	CN1	Second side of transformer B3B-XH
7	CN2	High pressure switch B2B-VH
8	CN3	Outdoor ambient temp. sensor B2B-XH
9	CN4	Primary side of transformer RTB-1.5-2P
10	CN5	4-way valve B2P3-VH
11	CN7	Control port for AC contactor B2P3-VH
12	CN8	Connection port of outdoor device B3B-XH
13	CN9	Outdoor fan motor B3P5-VH
14	CN10	Low pressure switch B2B-VH
15	CN11	Discharging sensor B2B-XH
16	CN12	Outdoor defrost sensor B2B-XH
17	Fuse	T3.15A/250VAC
18	SW1	Dip switch

Все каталоги и инструкции здесь: http://splitoff.ru/tehn-doc.html

11.4 Sensor characteristic

Model	Part code	Name	Characteristic
HPU-42CV03(in) HPU-42HV03(in)	0010401922	indoor coil temp. sensor	R25=10KΩ±3%， B25/50=3700K±3%
	001A3900159	indoor ambient temp. sensor	R25=23KΩ±2.5%， B25/50=4200K±3%
HPU-42CV03(out)	0010450398	discharging sensor	R80=50KΩ±3%， B25/80=4450K±3%
HPU-42HV03(out)	0010450398	discharging sensor	R80=50KΩ±3%， B25/80=4450K±3%
	0010451314	outdoor coil temp. sensor	R25=5KΩ±1%， B25/50=3450K±1%
	001A3900110	outdoor ambient temp. sensor	R25=5KΩ±1%， B25/50=3450K±1%

R25=10KΩ±3% B25/50=3700K±3%									
T(℃)	Rnom(KΩ)	T(℃)	Rnom(KΩ)	T(℃)	Rnom(KΩ)	T(℃)	Rnom(KΩ)	T(℃)	Rnom(KΩ)
-20	90.79	1	29.64	22	11.34	43	4.93	64	2.38
-19	85.72	2	28.22	23	10.87	44	4.9	65	2.3
-18	80.96	3	26.4	24	10.43	45	4.58	66	2.23
-17	76.51	4	25.61	25	10	46	4.42	67	2.16
-16	72.33	5	24.41	26	9.59	47	4.26	68	2.09
-15	68.41	6	23.27	27	9.21	48	4.11	69	2.03
-14	64.73	7	22.2	28	8.84	49	3.97	70	1.96
-13	61.27	8	21.18	29	8.48	50	3.83	71	1.9
-12	58.02	9	20.21	30	8.15	51	3.7	72	1.85
-11	54.97	10	19.3	31	7.83	52	3.57	73	1.79
-10	52.1	11	18.43	32	7.52	53	3.45	74	1.73
-9	49.4	12	17.61	33	7.23	54	3.33	75	1.68
-8	46.86	13	16.83	34	6.95	55	3.22	76	1.63
-7	44.46	14	16.09	35	6.68	56	3.11	77	1.58
-6	42.21	15	15.38	36	5.43	57	3.11	78	1.54
-5	40.08	16	14.71	37	5.6	58	2.9	79	1.49
-4	38.08	17	14.08	38	5.59	59	2.81	80	1.45
-3	36.19	18	13.48	39	5.73	60	2.72		
-2	34.41	19	12.9	40	5.52	61	2.63		
-1	32.73	20	12.36	41	5.32	62	2.54		
0	31.14	21	11.84	42	5.12	63	2.49		

Все каталоги и инструкции здесь: http://splitoff.ru/tehn-doc.html

R25=23KΩ±2.5% B25/50=4200K±3%			
T(℃)	Rnom(KΩ)	T(℃)	Rnom(KΩ)
-20℃	281.34	23℃	25.3
-19℃	263.56	24℃	24.12
-18℃	247.04	25℃	23
-17℃	231.66	26℃	21.94
-16℃	217.35	27℃	20.94
-15℃	204.02	28℃	19.99
-14℃	191.61	29℃	19.09
-13℃	180.04	30℃	18.23
-12℃	169.24	31℃	17.42
-11℃	159.17	32℃	16.65
-10℃	149.77	33℃	15.92
-9℃	140.99	34℃	15.22
-8℃	132.78	35℃	14.56
-7℃	125.11	36℃	13.93
-6℃	117.93	37℃	13.34
-5℃	111.22	38℃	12.77
-4℃	104.93	39℃	12.23
-3℃	99.04	40℃	11.71
-2℃	93.52	41℃	11.22
-1℃	88.35	42℃	10.76
0℃	83.5	43℃	10.31
1℃	78.94	44℃	9.89
2℃	74.67	45℃	9.49
3℃	70.65	46℃	9.1
4℃	66.88	47℃	8.74
5℃	63.33	48℃	8.39
6℃	60	49℃	8.05
7℃	56.86	50℃	7.73
8℃	53.91	51℃	7.43
9℃	51.13	52℃	7.14
10℃	48.51	53℃	6.86
11℃	46.04	54℃	6.6
12℃	43.72	55℃	6.34
13℃	41.52	56℃	6.1
14℃	39.45	57℃	5.87
15℃	37.5	58℃	5.65
16℃	35.66	59℃	5.44
17℃	33.92	60℃	5.24
18℃	32.27		
19℃	30.72		
20℃	29.25		
21℃	27.86		
22℃	26.54		

R80=50KΩ±3% B25/80=4450K±3%					
T(℃)	Rnom(KΩ)	T(℃)	Rnom(KΩ)	T(℃)	Rnom(KΩ)
-30	11600	13	933.4	56	127.3
-29	10860	14	886.4	57	122.1
-28	10170	15	841.9	58	117.2
-27	9529	16	800	59	112.5
-26	8932	17	760.8	60	108
-25	8375	18	722.8	61	103.8
-24	7856	19	687.3	62	99.68
-23	7372	20	653.8		
-22	6920	21	622		
-21	6498	22	592		
-20	6104	23	553.6		
-19	5736	24	536.6		
-18	5392	25	511.1		
-17	5071	26	486.9		
-16	4770	27	464		
-15	4488	28	442.3		
-14	4225	29	421.7		
-13	3978	30	402.1		
-12	3747	31	383.6		
-11	3531	32	366		
-10	3328	33	349.3		
-9	3138	34	333.5		
-8	2960	35	318.4		
-7	2793	36	304.1		
-6	2636	37	290.5		
-5	2489	38	277.6		
-4	2351	39	265.3		
-3	2221	40	253.6		
-2	2099	41	242.5		
-1	1984	42	232		
0	1877	43	221.9		
1	1775	44	212.3		
2	1680	45	203.2		
3	1590	46	194.5		
4	1506	47	186.3		
5	1426	48	178.4		
6	1351	49	170.9		
7	1280	50	163.7		
8	1214	51	155.9		
9	1151	52	150.4		
10	1092	53	144.2		
11	1036	54	138.3		
12	983.2	55	132.7		

Все каталоги и инструкции здесь: http://splitoff.ru/tehn-doc.html

R25=5KΩ±1% B25/50=3450K±1%					
T(℃)	Rnom(KΩ)	T(℃)	Rnom(KΩ)	T(℃)	Rnom(KΩ)
-20℃	47.12	10℃	10.35	40℃	2.633
-19℃	45.17	11℃	9.837	41℃	2.536
-18℃	43.24	12℃	9.351	42℃	2.432
-17℃	41.35	13℃	8.892	43℃	2.339
-16℃	39.49	14℃	8.458	44℃	2.25
-15℃	37.68	15℃	8.048	45℃	2.165
-14℃	35.92	16℃	7.661	46℃	2.084
-13℃	34.21	17℃	7.295	47℃	2.006
-12℃	32.56	18℃	6.949	48℃	1.932
-11℃	30.37	19℃	6.622	49℃	1.862
-10℃	29.44	20℃	6.313	50℃	1.793
-9℃	27.57	21℃	6.021	51℃	1.729
-8℃	26.57	22℃	5.744	52℃	1.667
-7℃	25.22	23℃	5.482	53℃	1.608
-6℃	23.94	24℃	5.235	54℃	1.551
-5℃	22.72	25℃	5	55℃	1.457
-4℃	21.55	26℃	4.778	56℃	1.445
-3℃	20.45	27℃	4.567	57℃	1.395
-2℃	19.39	28℃	4.36	58℃	1.347
-1℃	18.39	29℃	4.179	59℃	1.301
0℃	17.45	30℃	3.993	60℃	1.257
1℃	16.55	31℃	3.819		
2℃	15.7	32℃	3.657		
3℃	14.89	33℃	3.514		
4℃	14.13	34℃	3.368		
5℃	13.41	35℃	3.23		
6℃	12.73	36℃	3.098		
7℃	12.08	37℃	2.973		
8℃	11.47	38℃	2.845		
9℃	10.9	39℃	2.741		

Все каталоги и инструкции здесь: http://splitoff.ru/tehn-doc.html

Haier

Commercial Air Conditioner

Model: HPU-42CV03
HPU-42HV03

Sincere Forever

Haier Group

Haier Industrial Park, No.1, Haier Road

266101, Qingdao, China

http://www.haier.com

splitoff.ru

Большая библиотека технической документации
http://splitoff.ru/tehn-doc.html
каталоги, инструкции, сервисные мануалы, схемы.